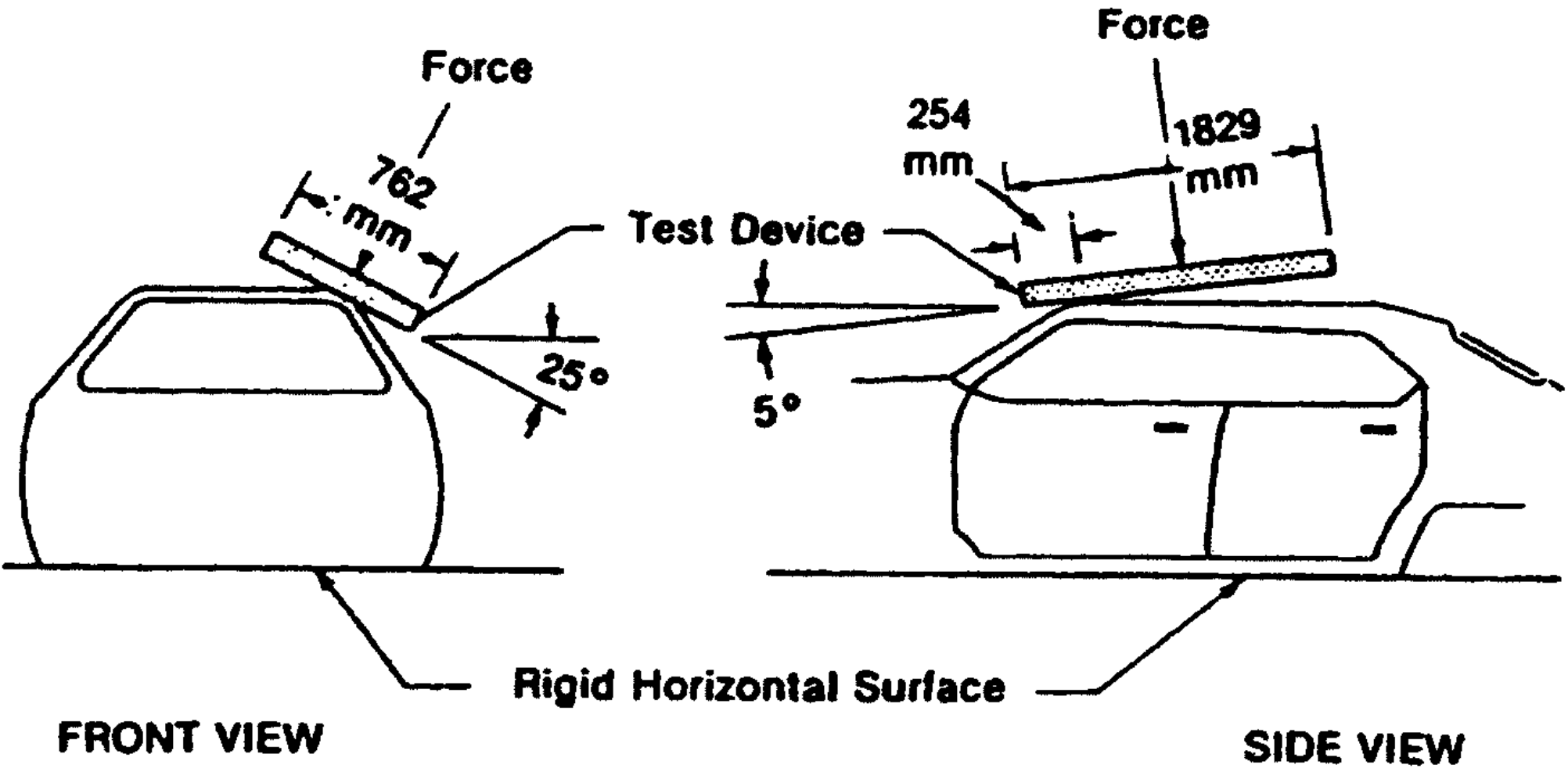

Figure 2.- Test Device Location And Application To The Roof