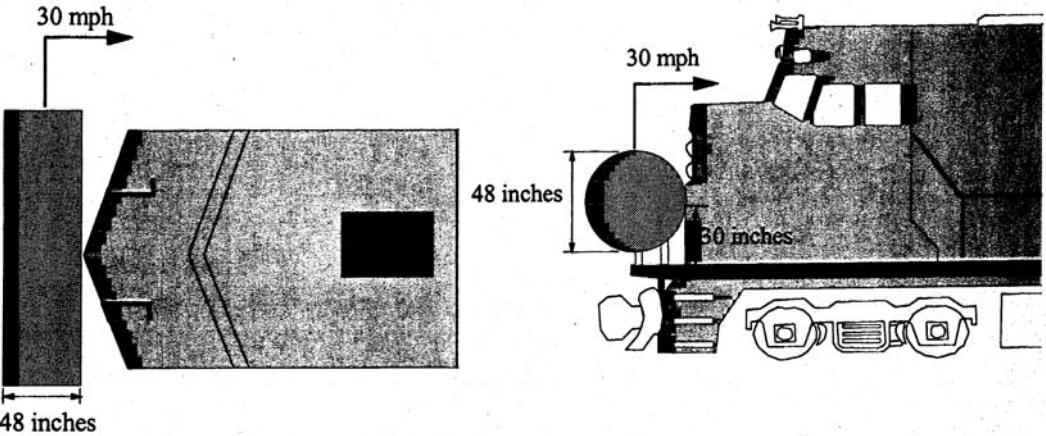

Figure 1. Schematic of Front End Structure (Collision Posts) Impact