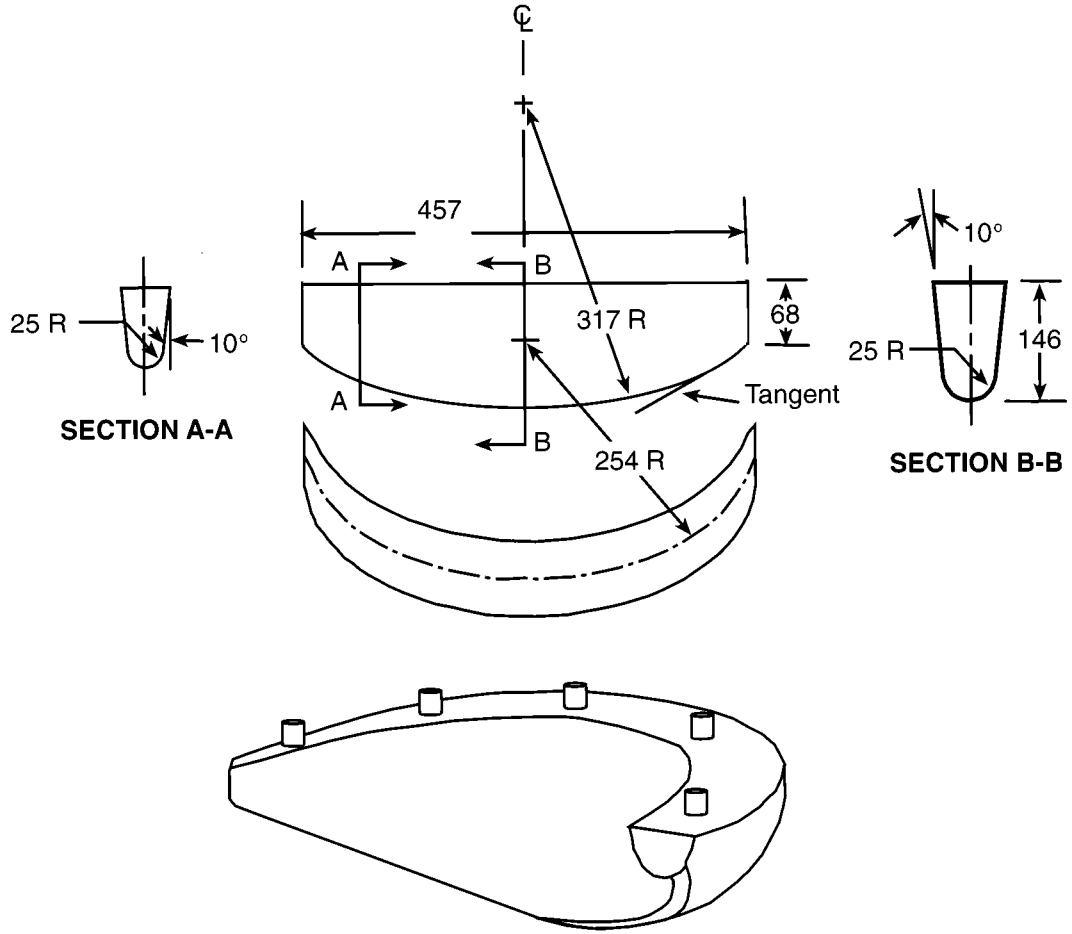

MATERIAL: Cast Aluminum 355
T-6 Condition
Finish-1.3 Micrometer (um)

Figure 2. DIAGRAM OF BEAD UNSEATING BLOCK
All dimensions in millimeters (mm)