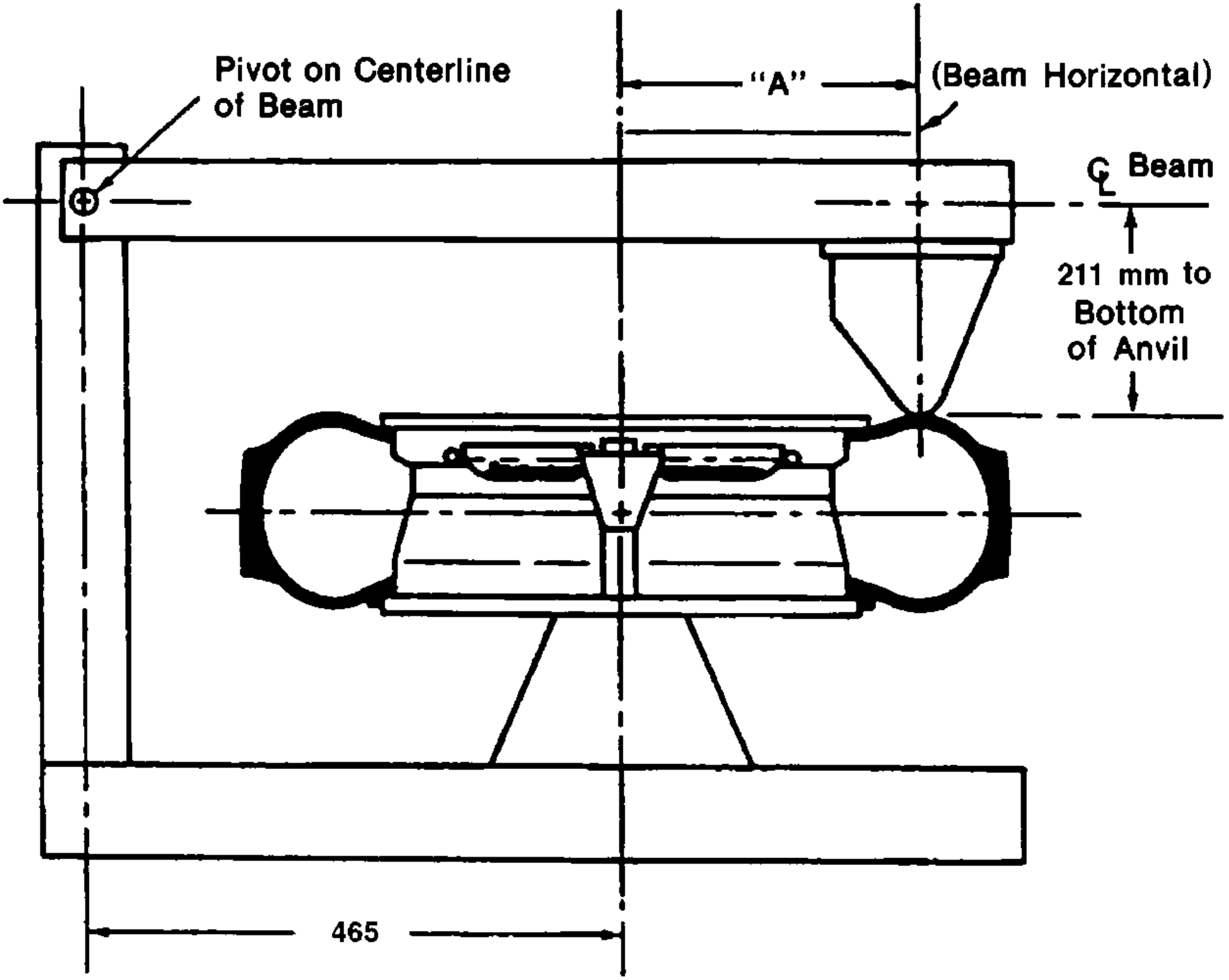

Figure 1.—Bead Unseating Fixture
All Dimensions in Millimeters (mm)