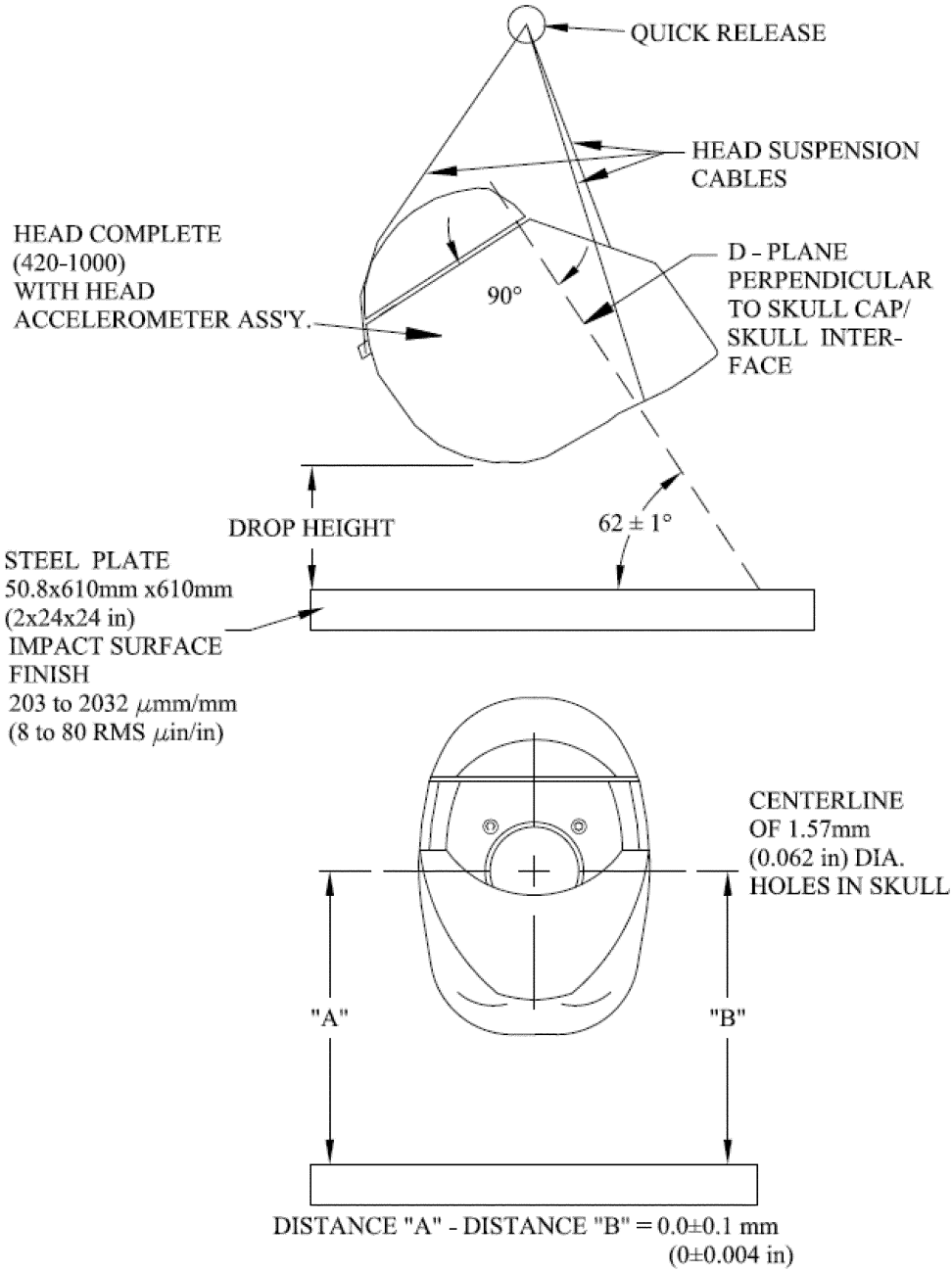FIGURE T1
HEAD DROP TEST SET-UP SPECIFICATIONS