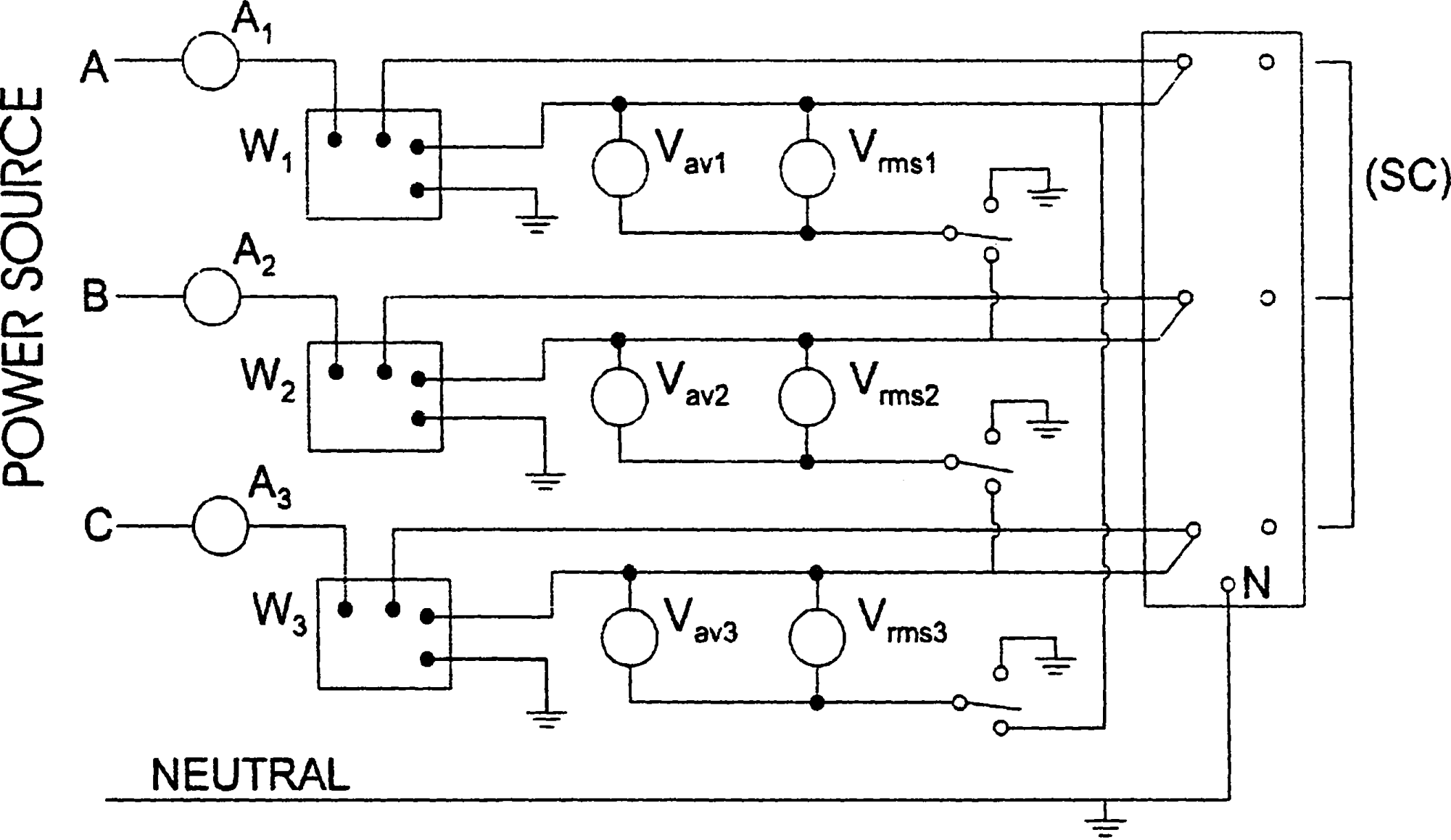

Figure 4.3 Three-Phase Test Set Without Instrument Transformers