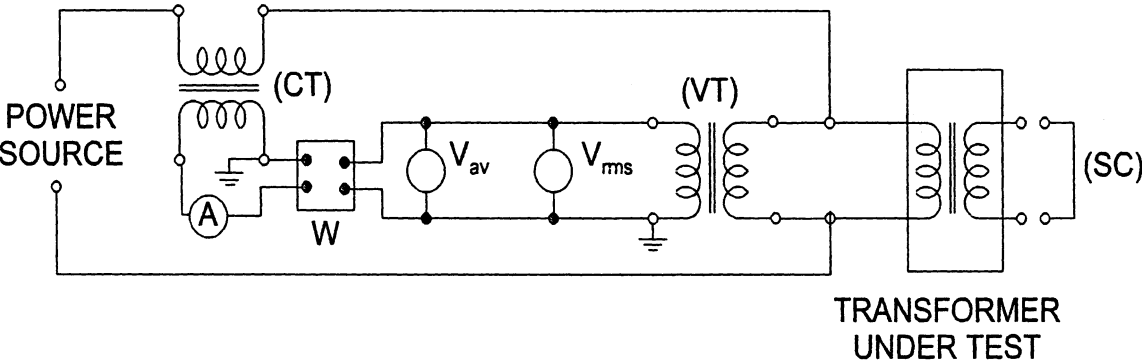

Figure 4.2 Single-Phase Test Set With Instrument Transformers