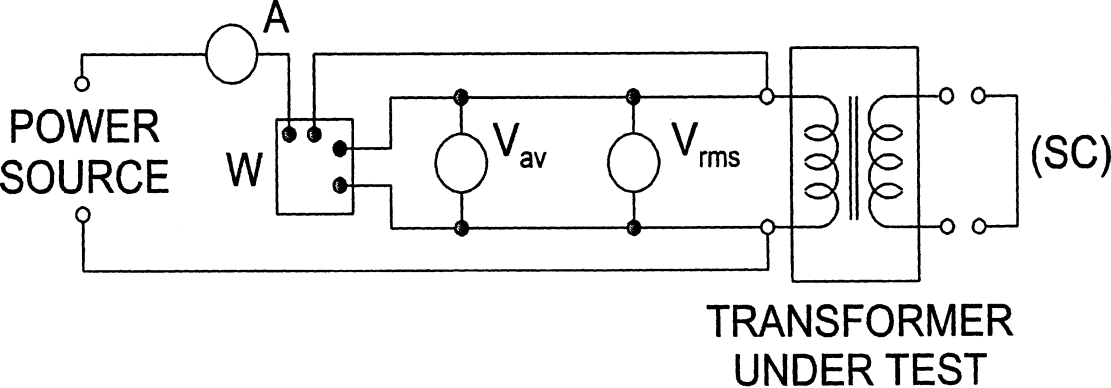

Figure 4.1 Single-Phase Test Set Without Instrument Transformers