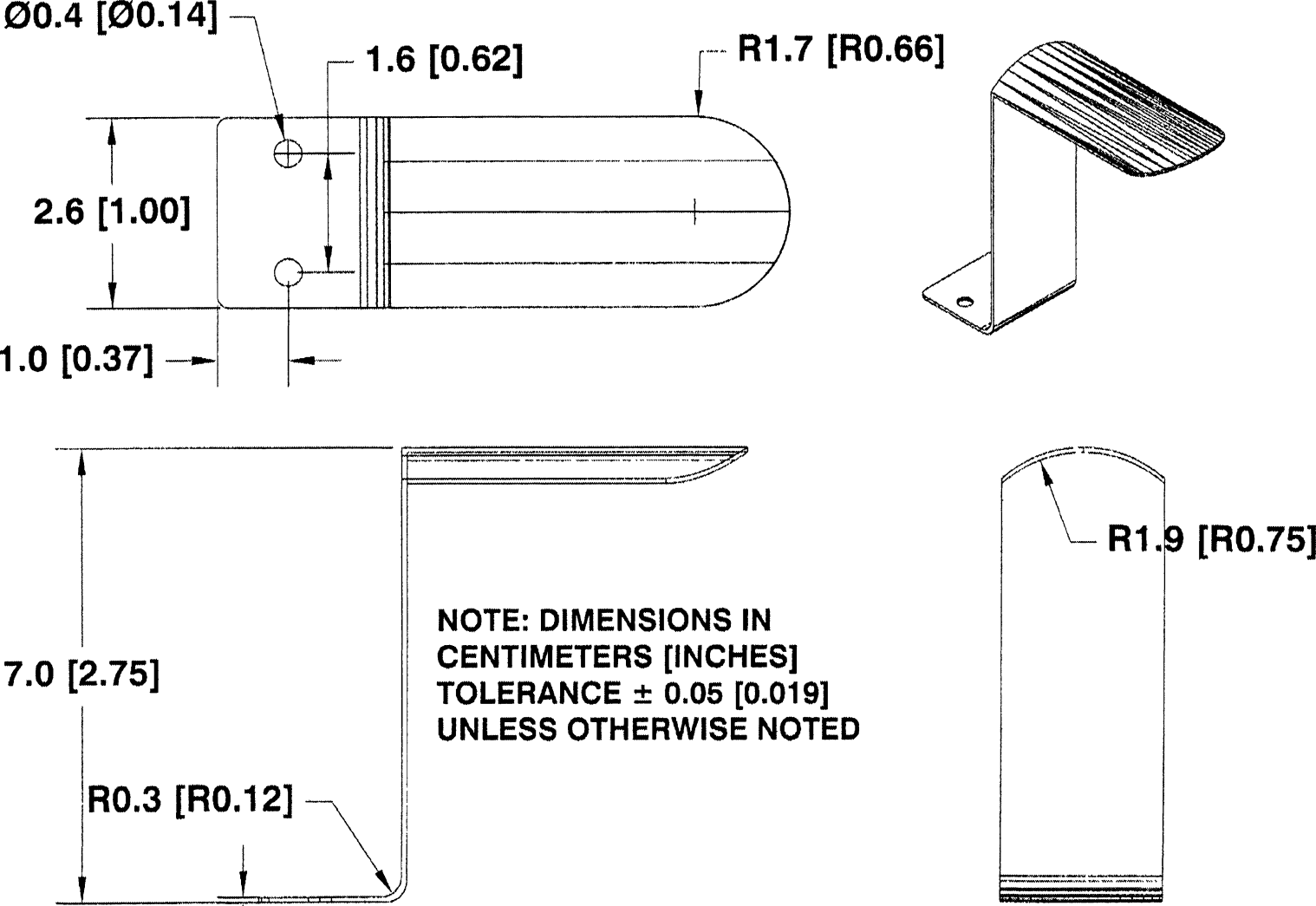

AN EXAMPLE OF A TYPICAL GAS SHIELD
FIGURE 5