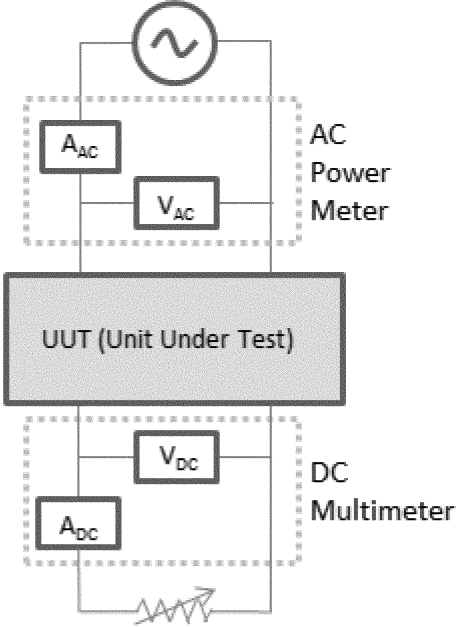


**Figure 1. Example Connection Diagram for EPS Efficiency Measurements**