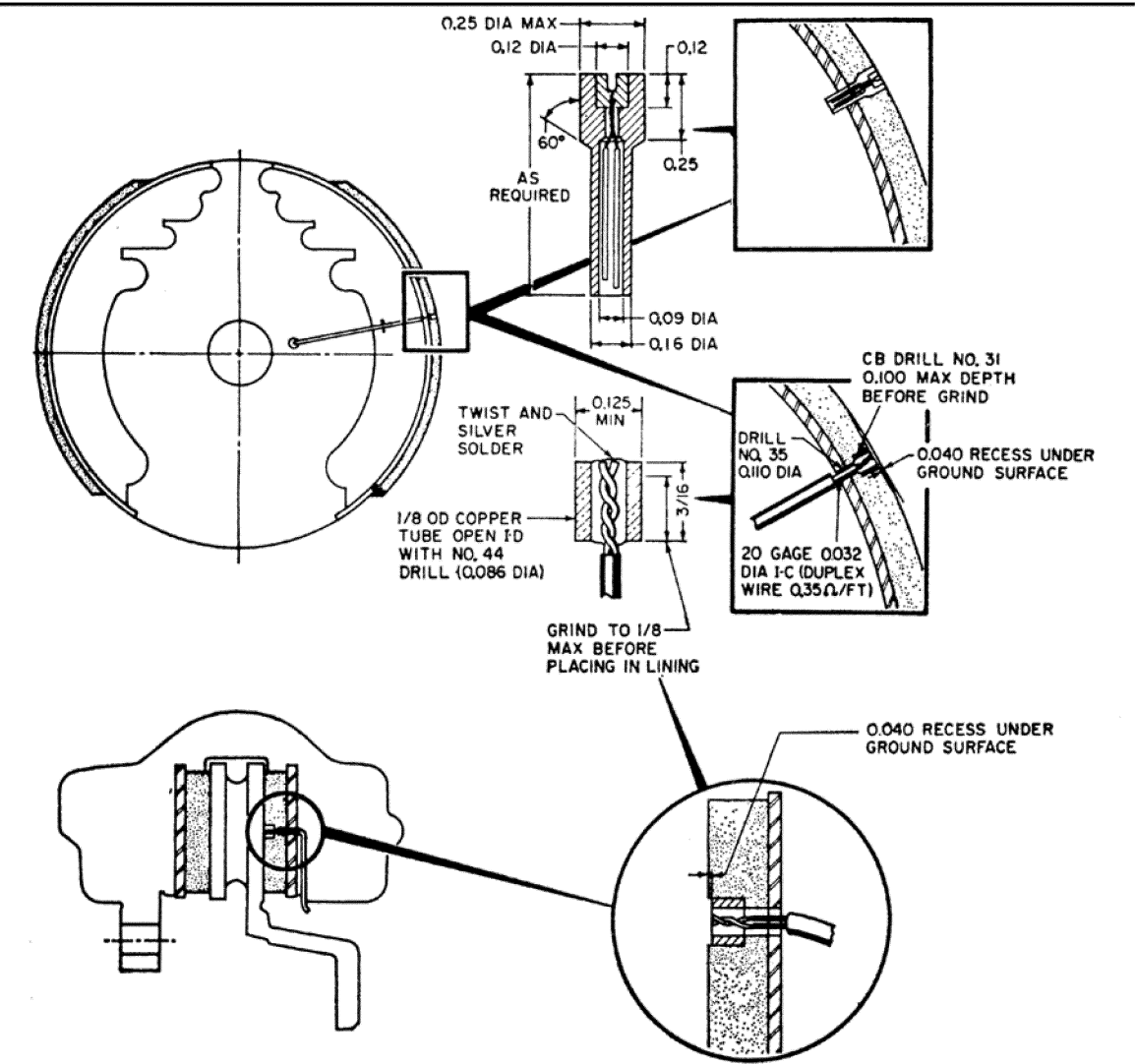Figure 2. Typical Plug Type Thermocouple Installations