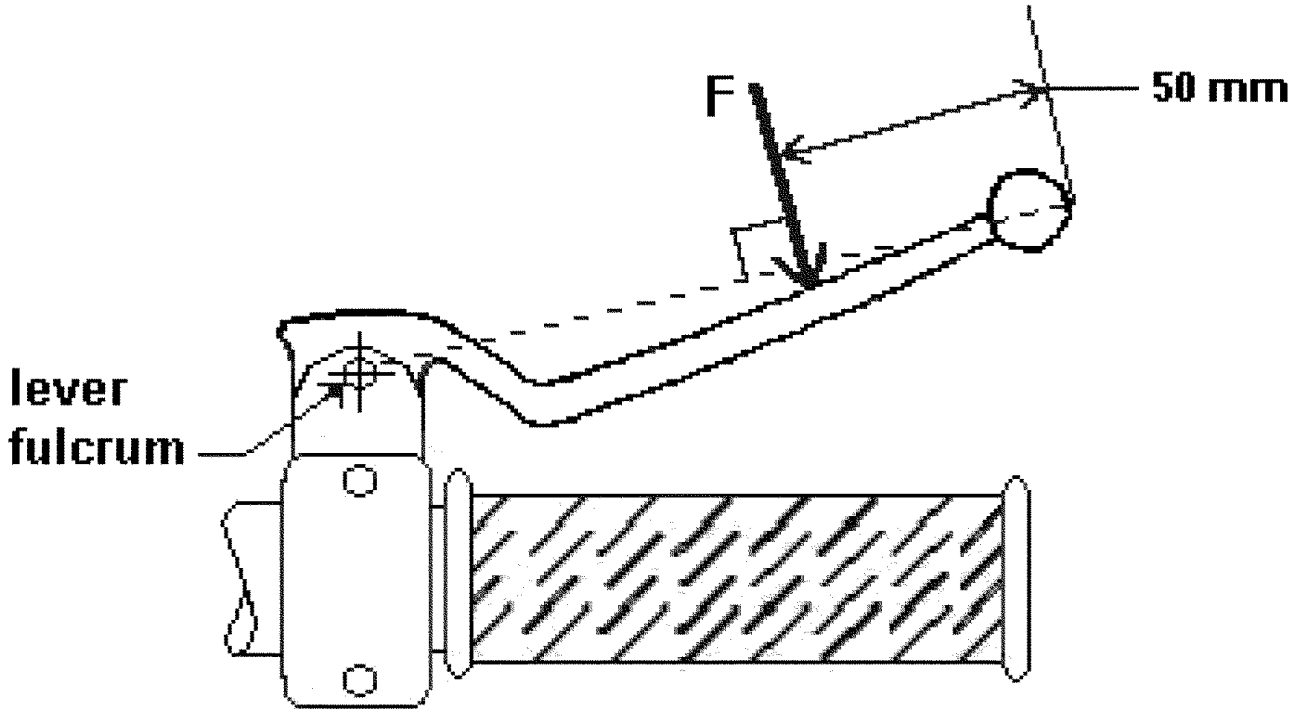Figure 1. Hand control lever force application points and direction.