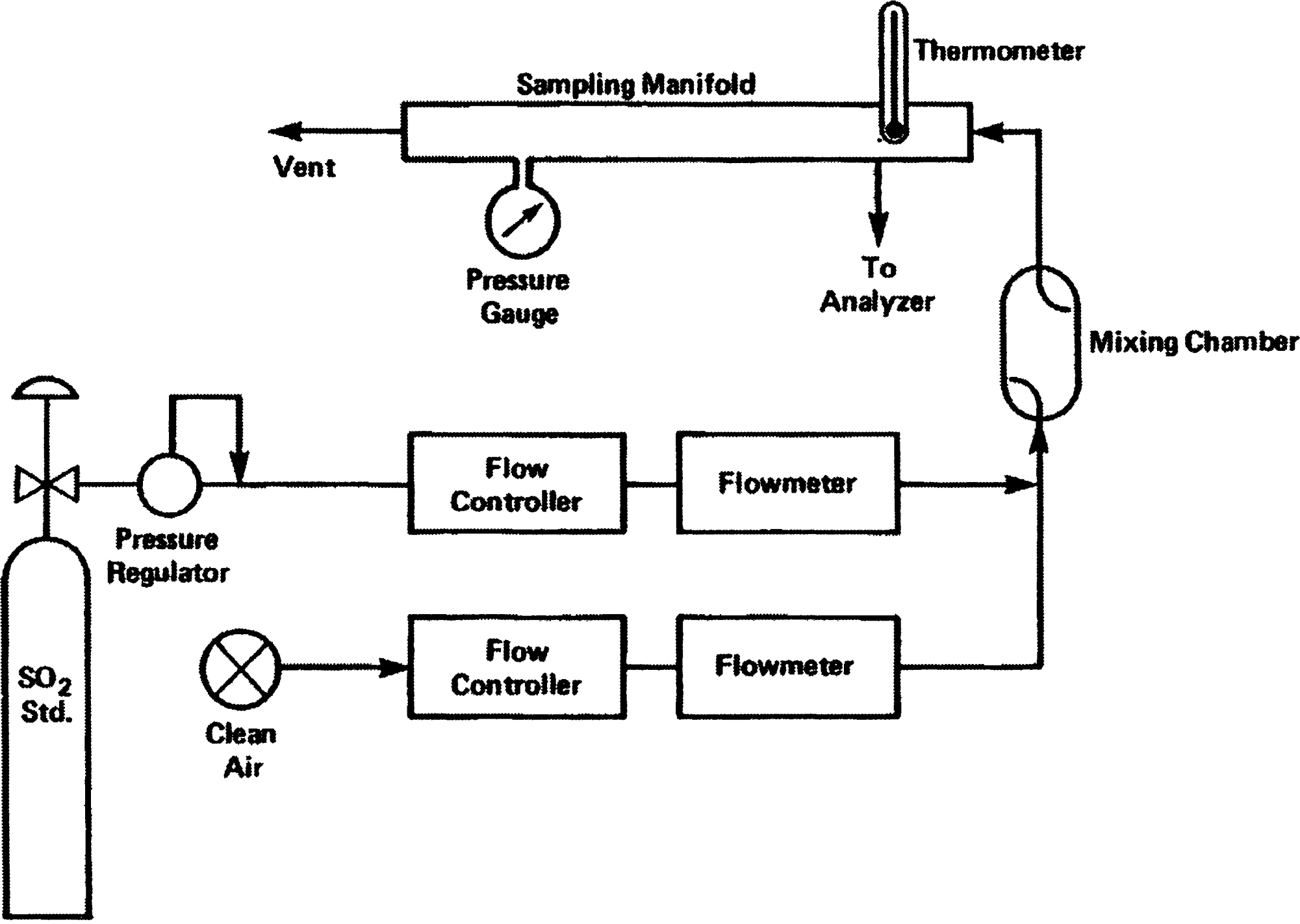

Figure 2. Calibration system using a compressed gas standard.