FIGURE 10
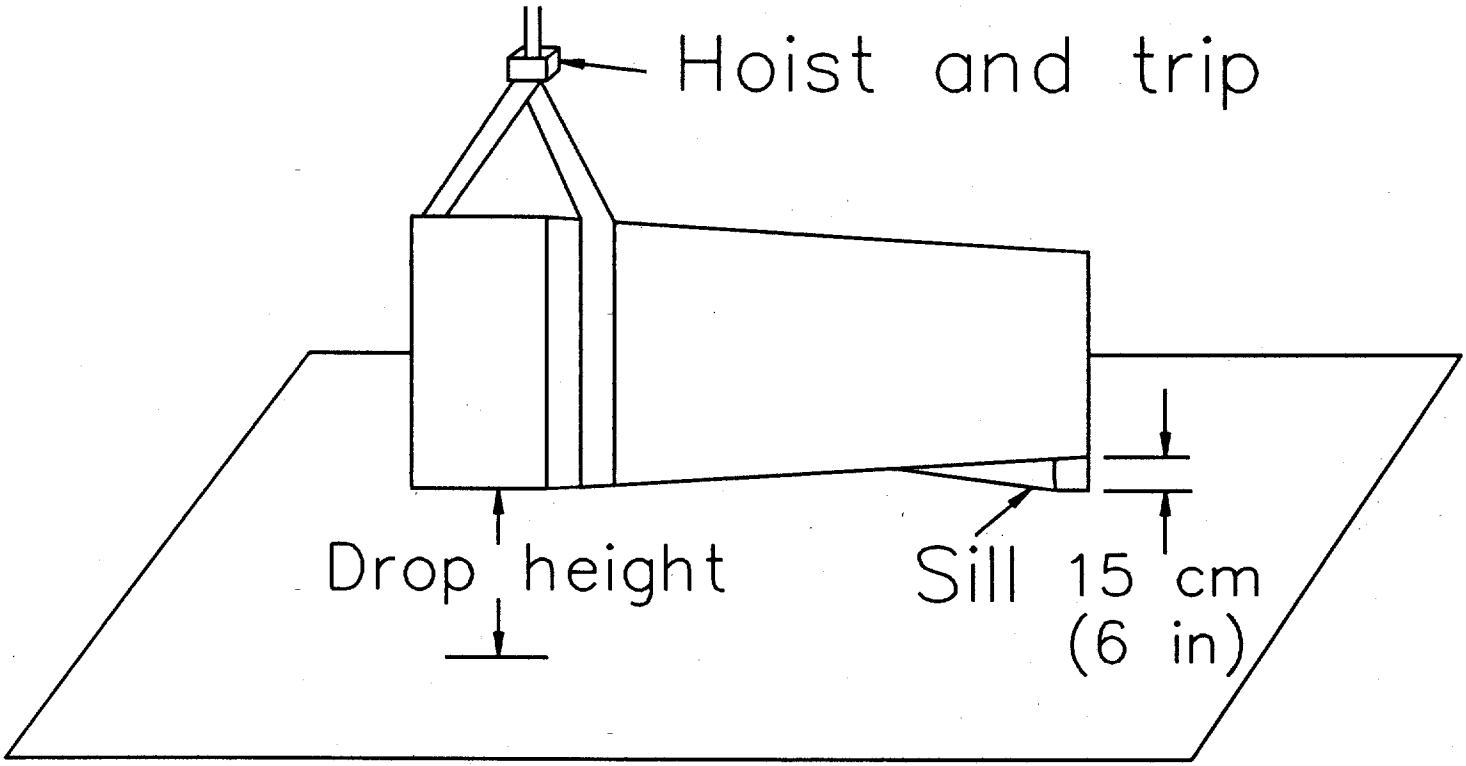
EDGE DROP TEST FOR PACKAGED HOUSINGS WEIGHING MORE THAN 91 KILOGRAMS (200 POUNDS)