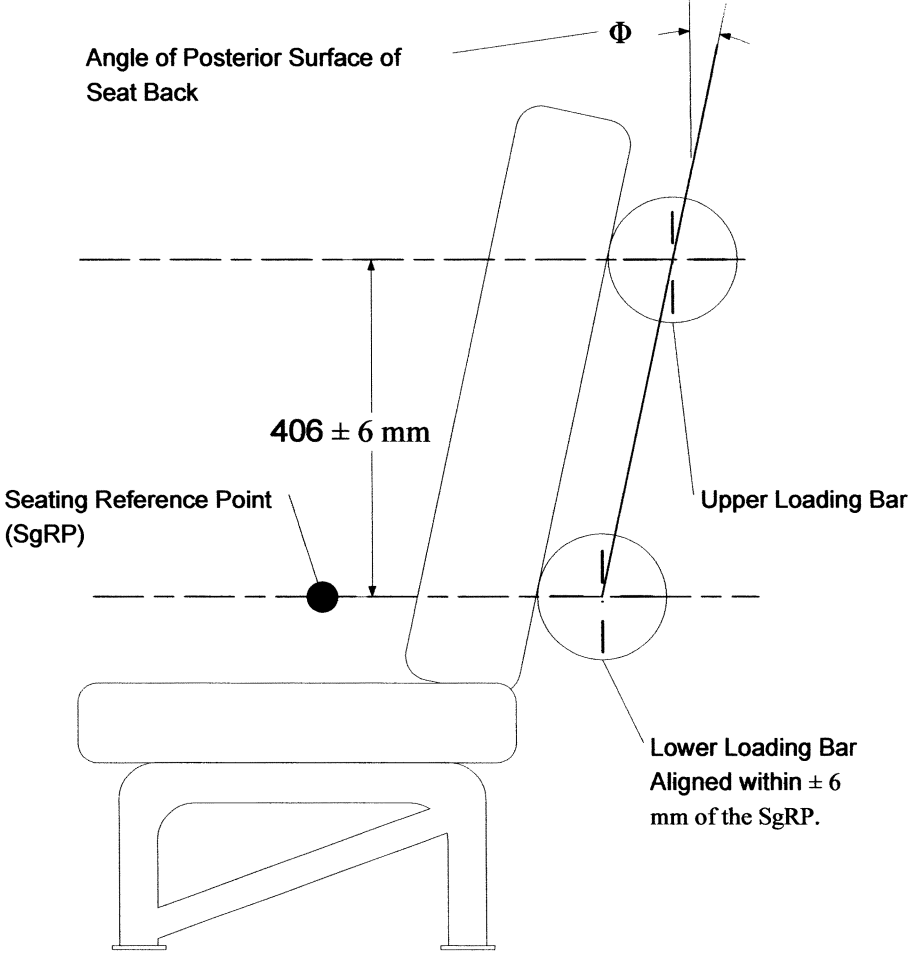

Figure 8 – Definition of initial angle of compartmentalizing seat back surface