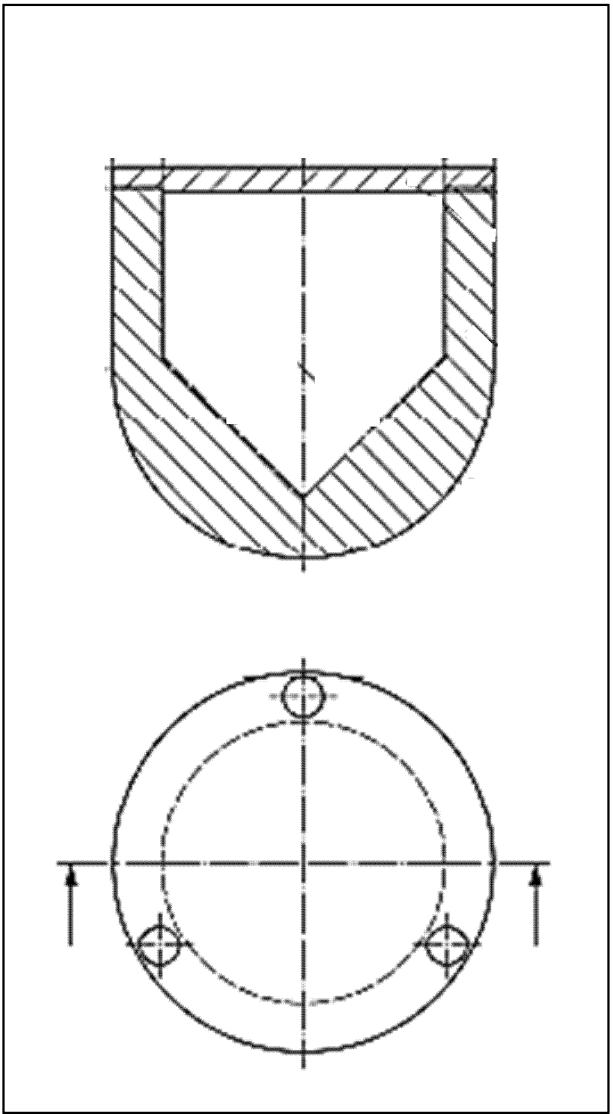Figure 1 to Subpart H of Part 238—Cylindrical Projectile for Use in § 238.721 End-Facing Cab-Glazing Testing