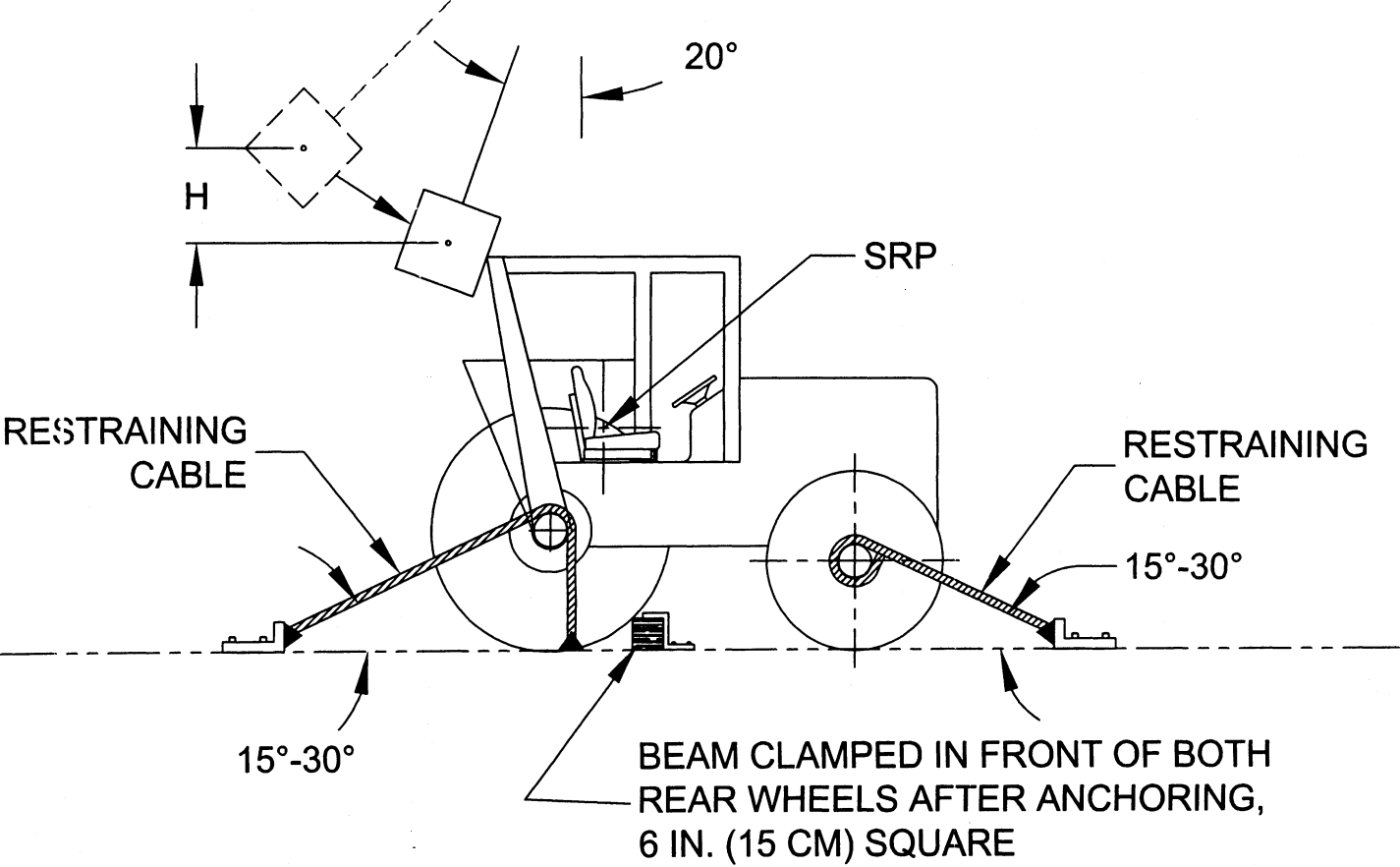

FIGURE C-15 - REAR IMPACT APPLICATION.