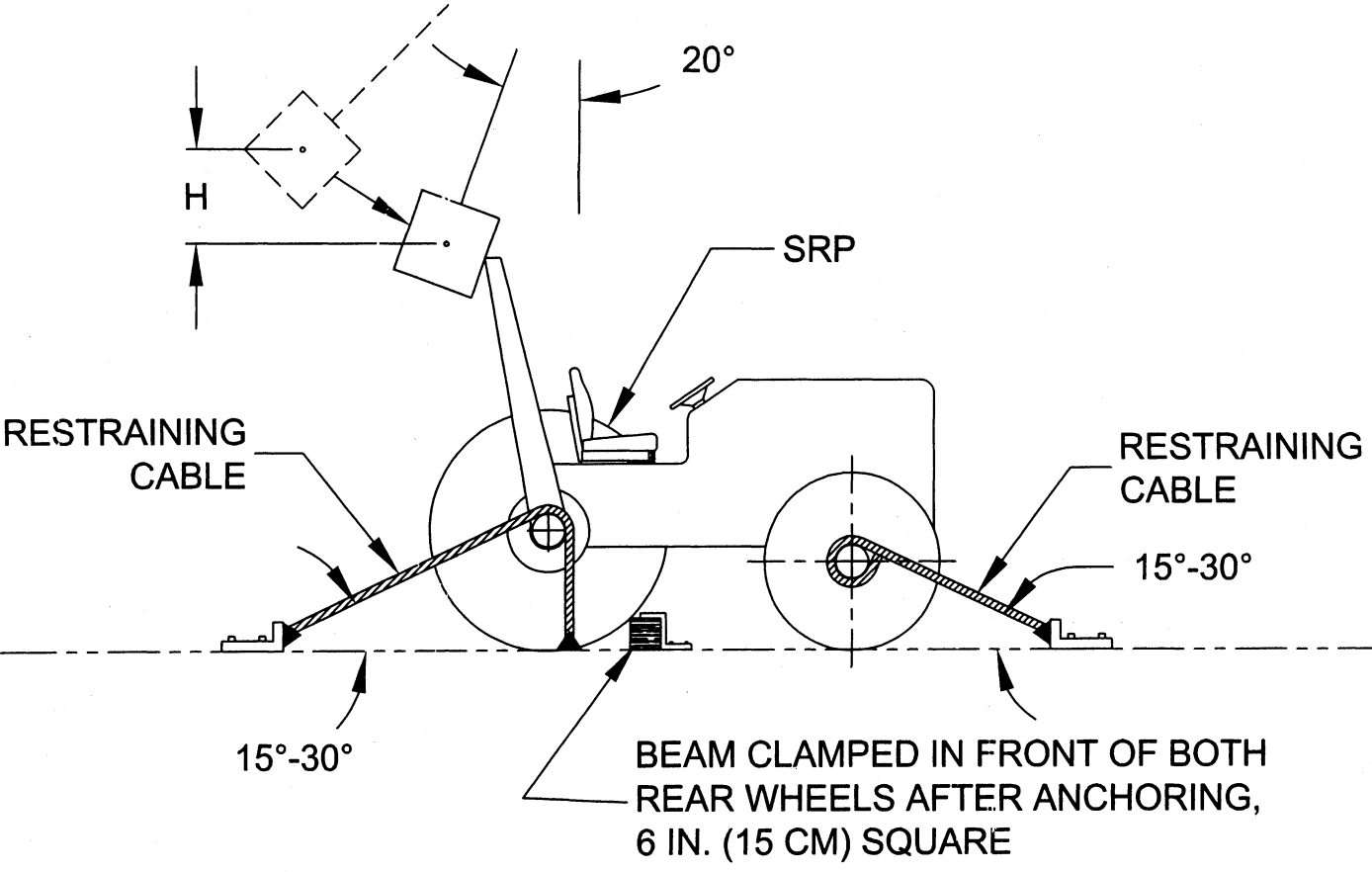

FIGURE C-8 - REAR IMPACT APPLICATION.