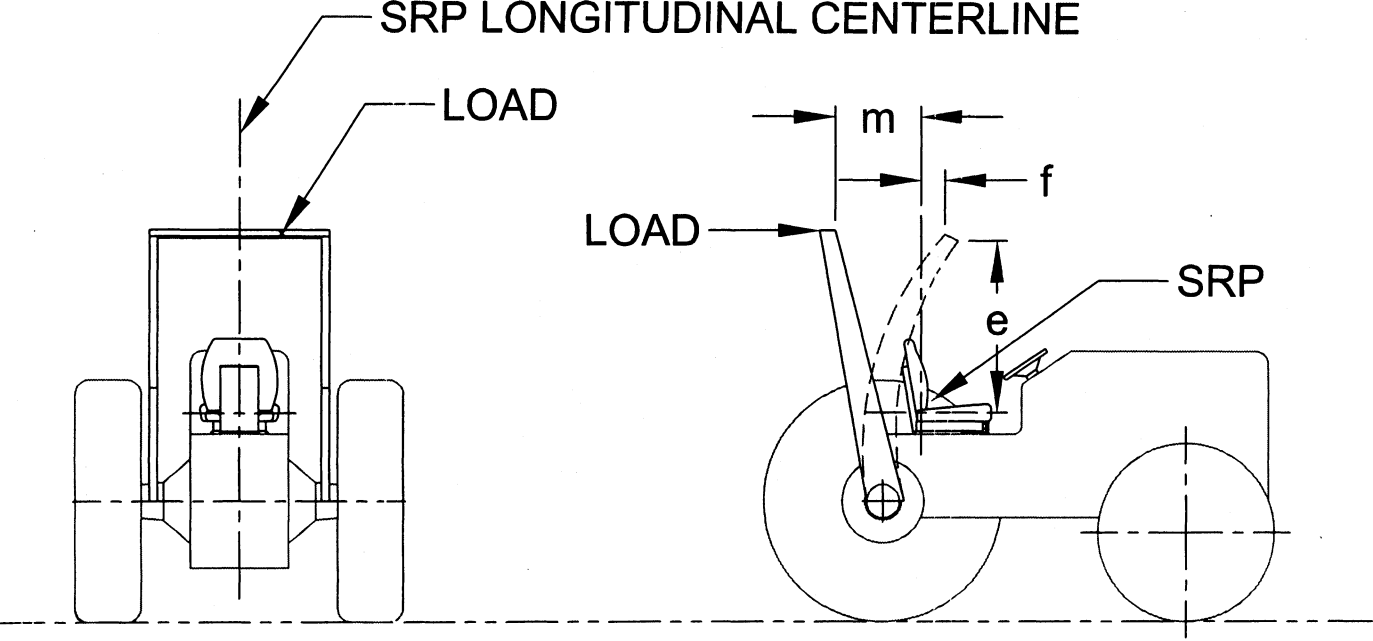

FIGURE C-3 - REAR LOAD APPLICATION.