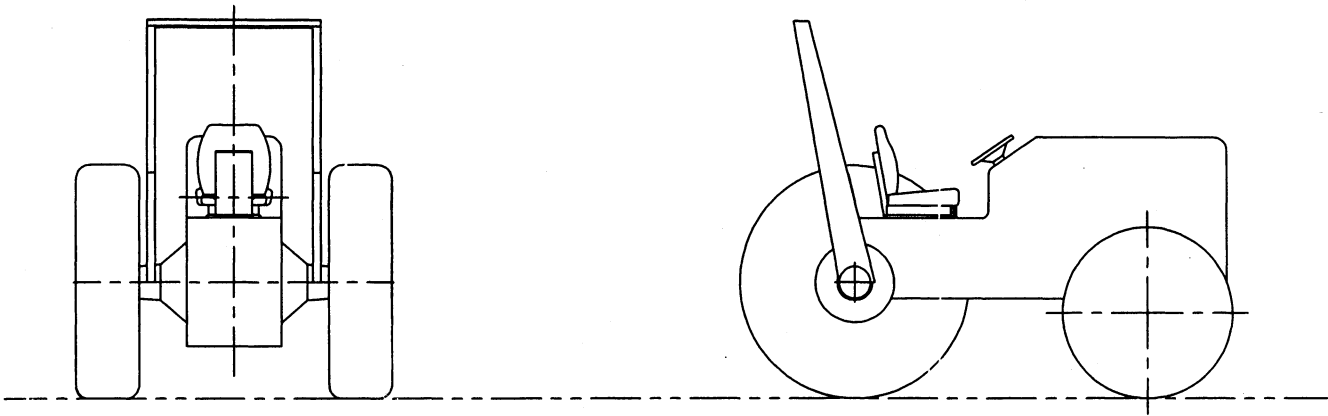

FIGURE C-1 - TRACTOR WITH TYPICAL PROTECTIVE FRAME.