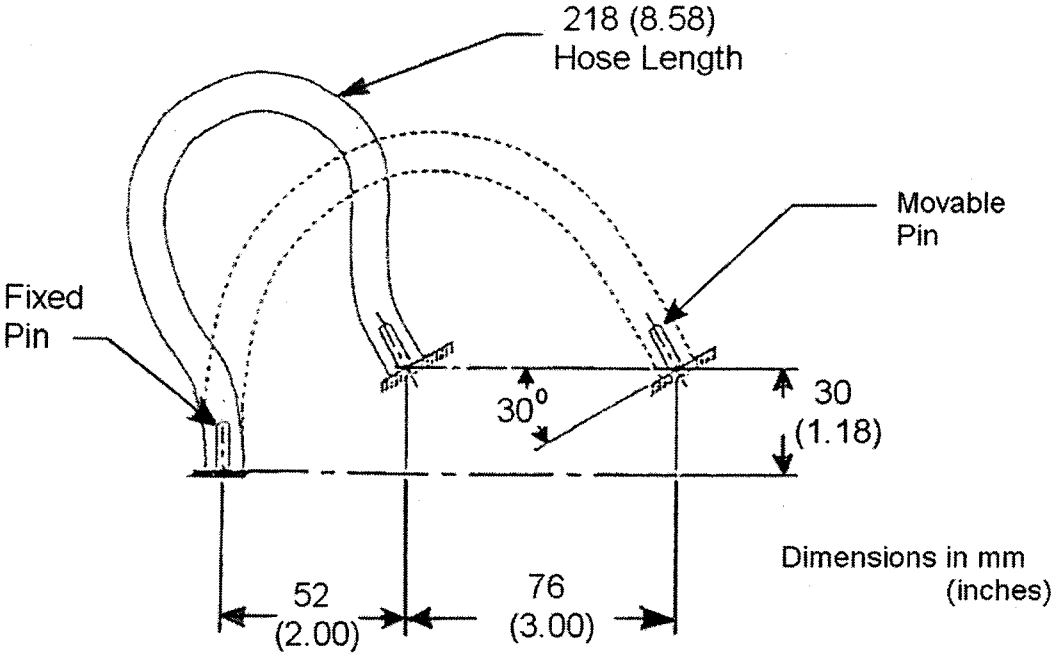Figure 3. Dynamic Ozone Test Apparatus