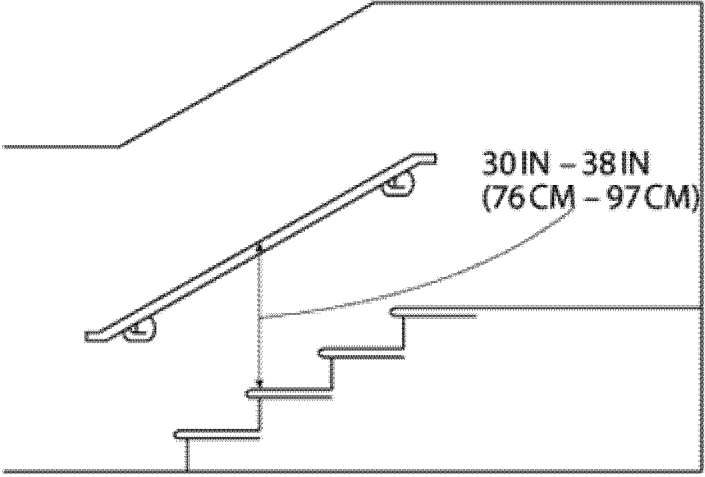
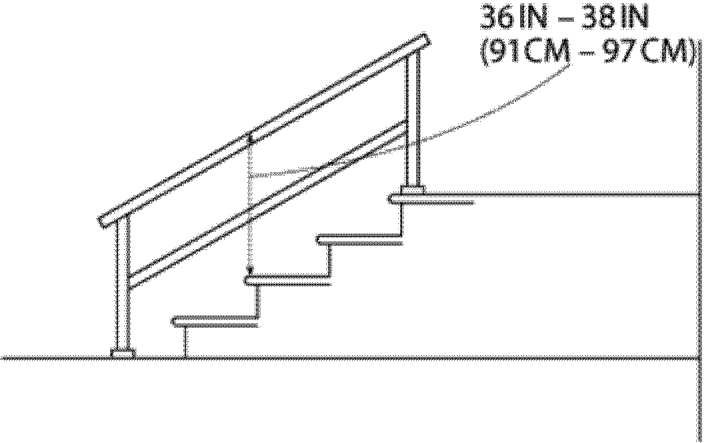
Figure D-12 – Handrail Measurement