FIGURE O-1. DOWNTUBE EXTENSION

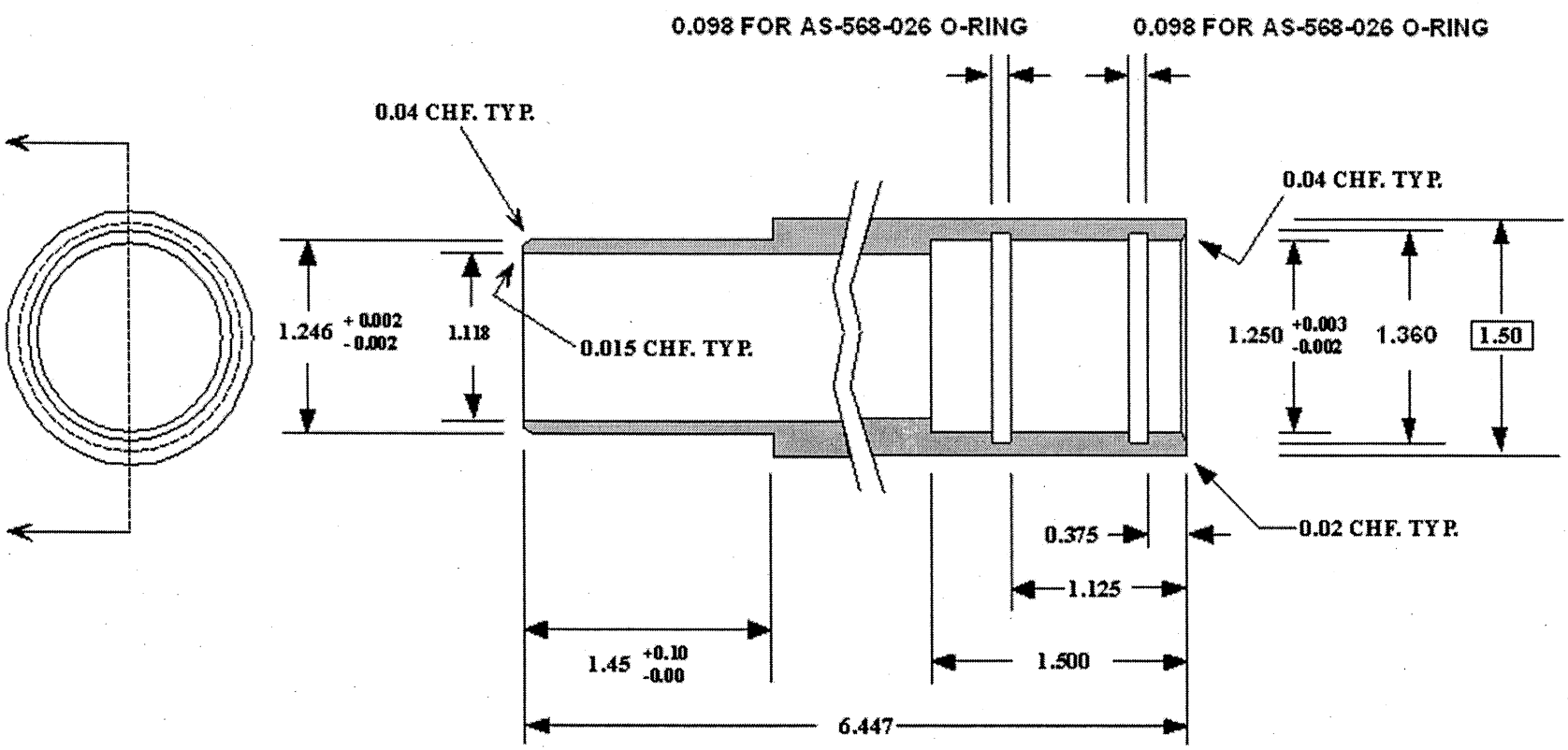

NOTES:

(1) BREAK ALL SHARP EDGES
(2) MATERIAL IS ALUMINUM
(3) CLEAR ANODIZE
(4) BOXED DIMENSIONS ARE OPTIONAL
(5) 64 RMS FINISH ALL OVER

TOLERANCES				ALL DIMENSIONS ARE INCHES
2 PLCS. +/- 0.010	3 PLCS +/- 0.005	FRAC. +/- 1/64	ANGLE +/- 15°	