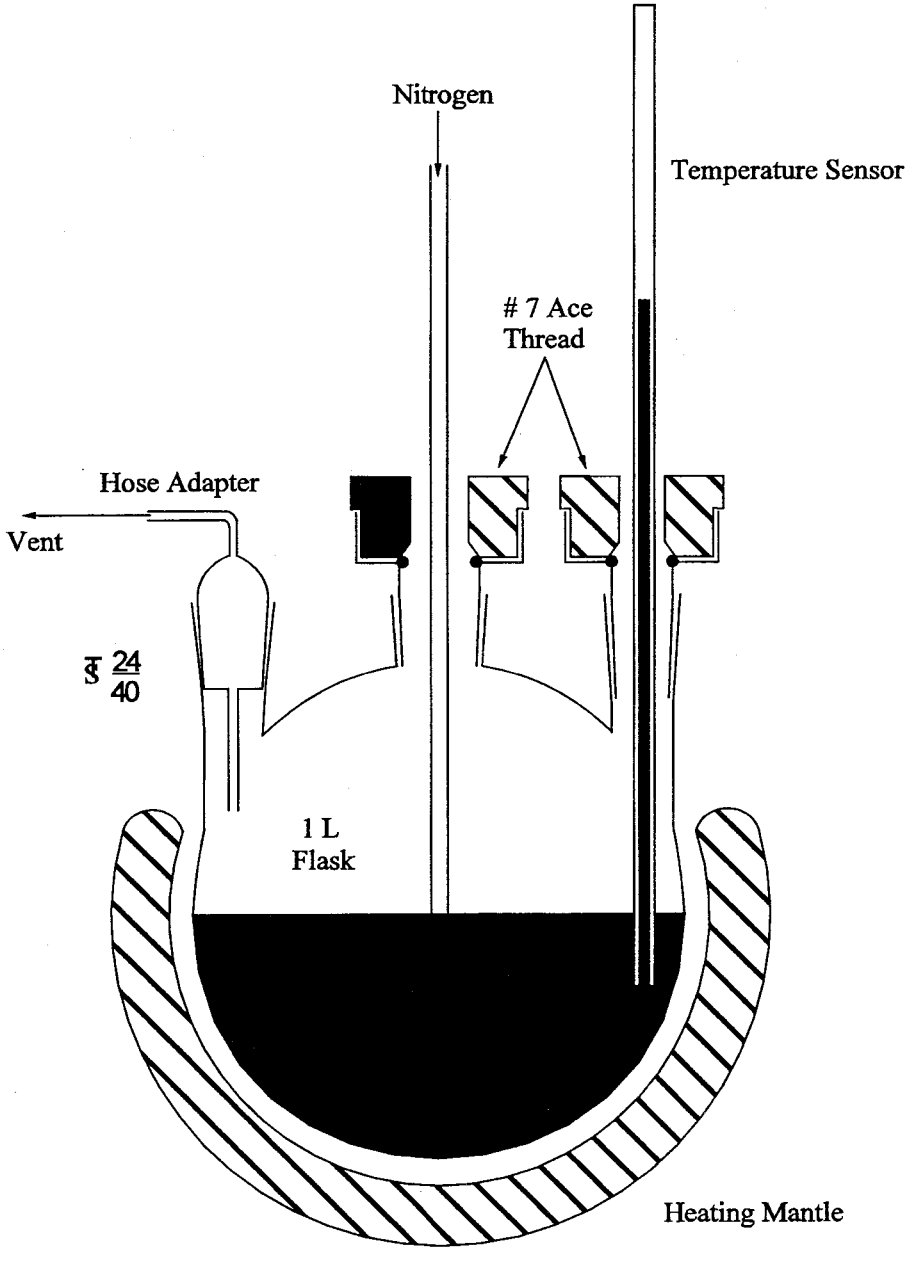

Figure 25D-4. Schematic of PEG Cleaning System.