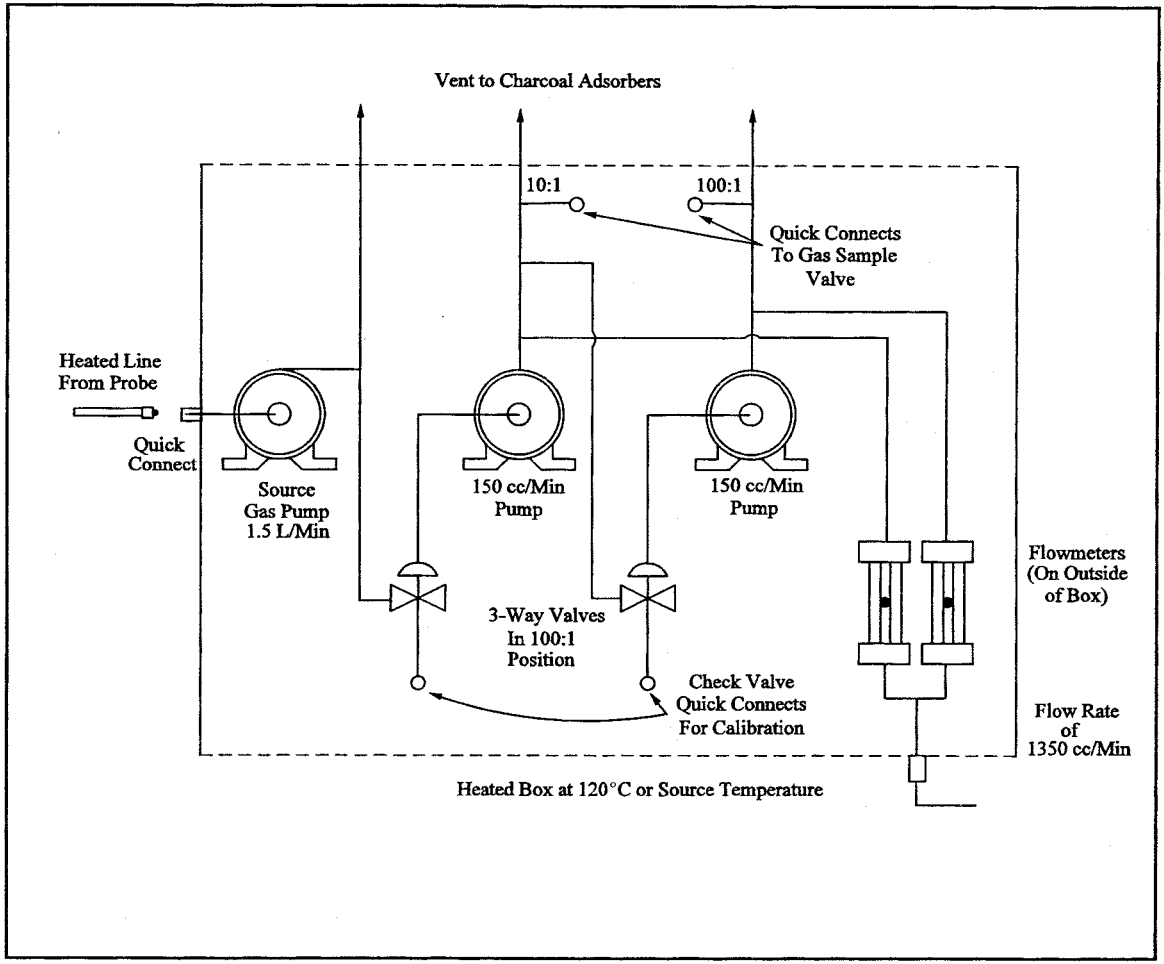

Figure 18-13. Schematic Diagram of the Heated Box Required for Dilution of Sample Gas.