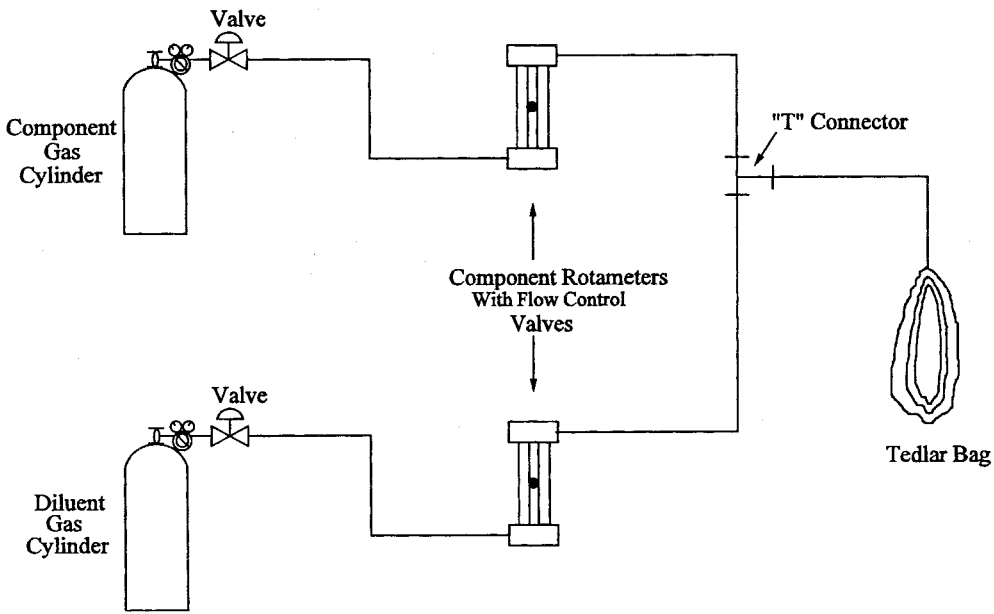

Figure 18-5. Single-Stage Calibration Gas Dilution System.