Facility Operator/Owner Name: ABC Oil and Gas
Land Description: As defined in § 3170.3
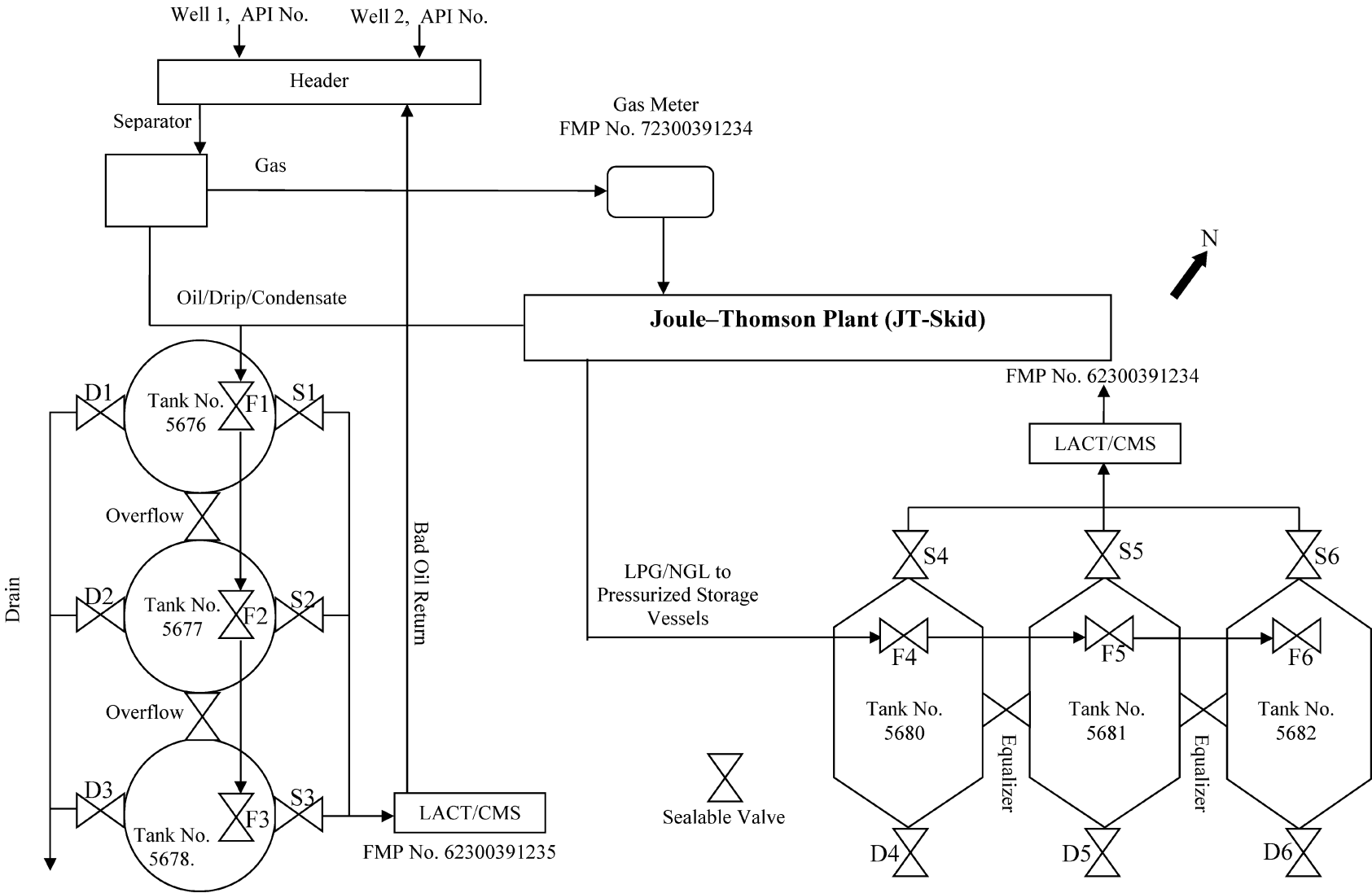
Federal/Indian Lease, unit PA, or CA Number: NMNM12345