Facility Operator/Owner Name: ABC Oil and Gas

Federal/Indian Lease, unit PA, or CA Number: NMNM98765

Land Description: As defined in § 3170.3

POD Facility
2

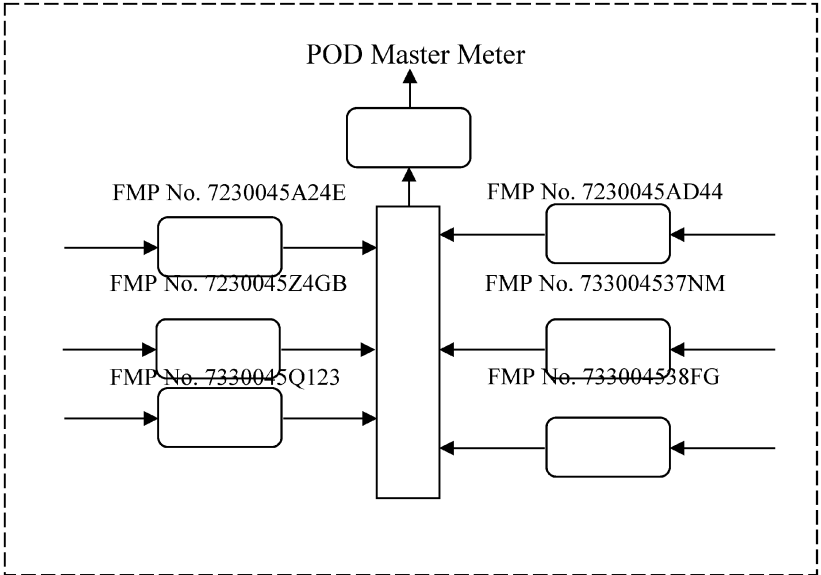
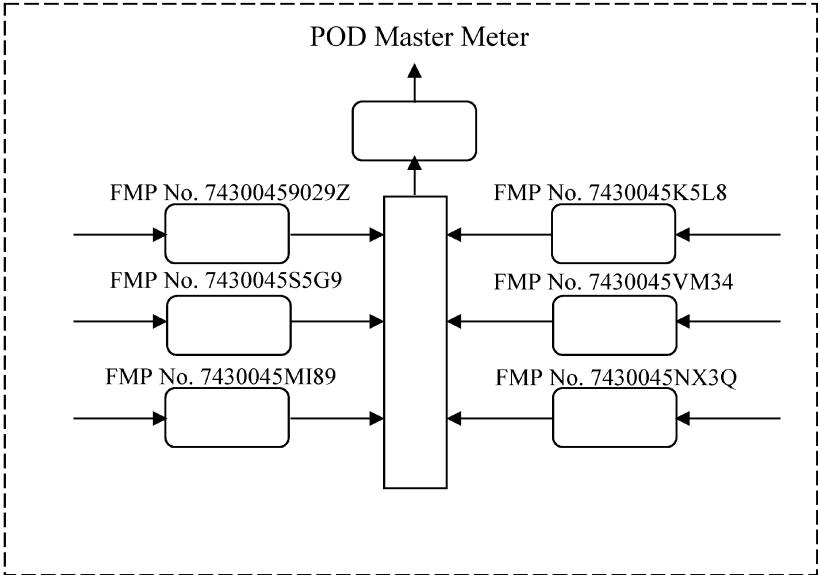
POD Facility
1