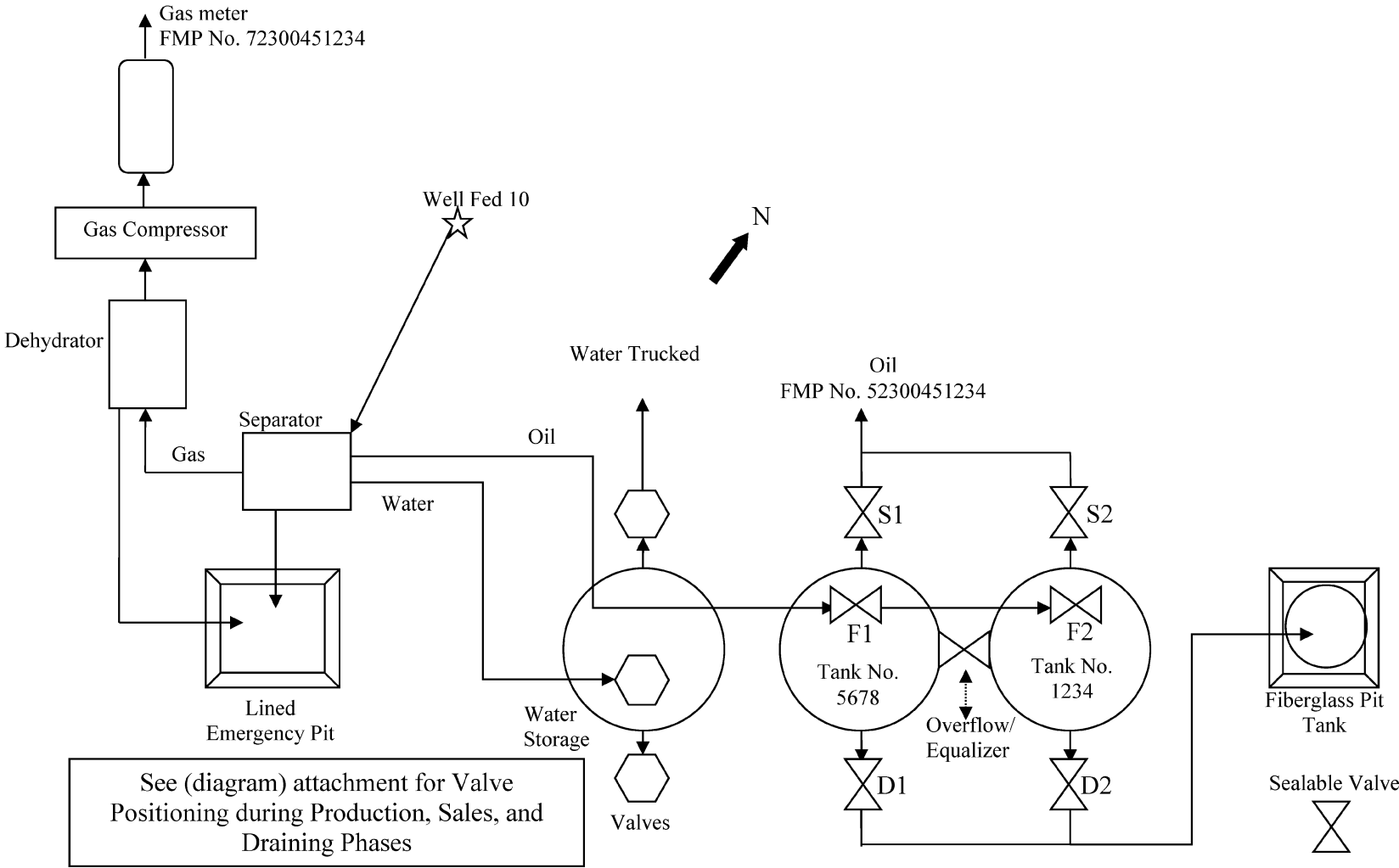Facility Operator/Owner Name: ABC Oil and Gas Federal/Indian Lease, unit PA, or CA Number: NMNM12345
Land Description: As defined in § 3170.3 Page 1 of 3