Facility Operator/Owner Name: ABC Oil and Gas

Federal/Indian Lease, unit PA, or CA Number: NMNM12345 and NMNM54321

Land Description: As defined in § 3170.3



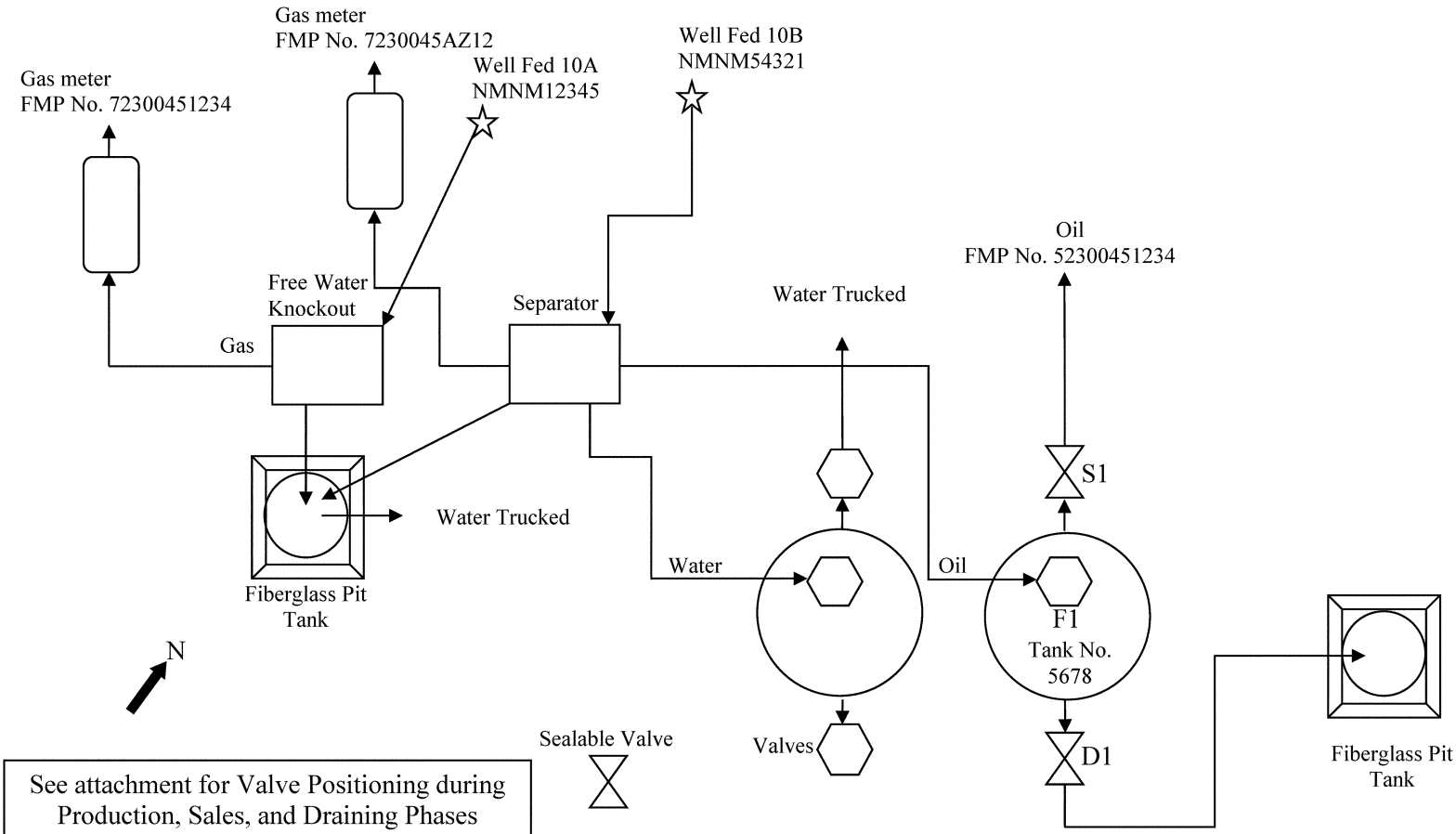


See attachment for Valve Positioning during Production, Sales, and Draining Phases