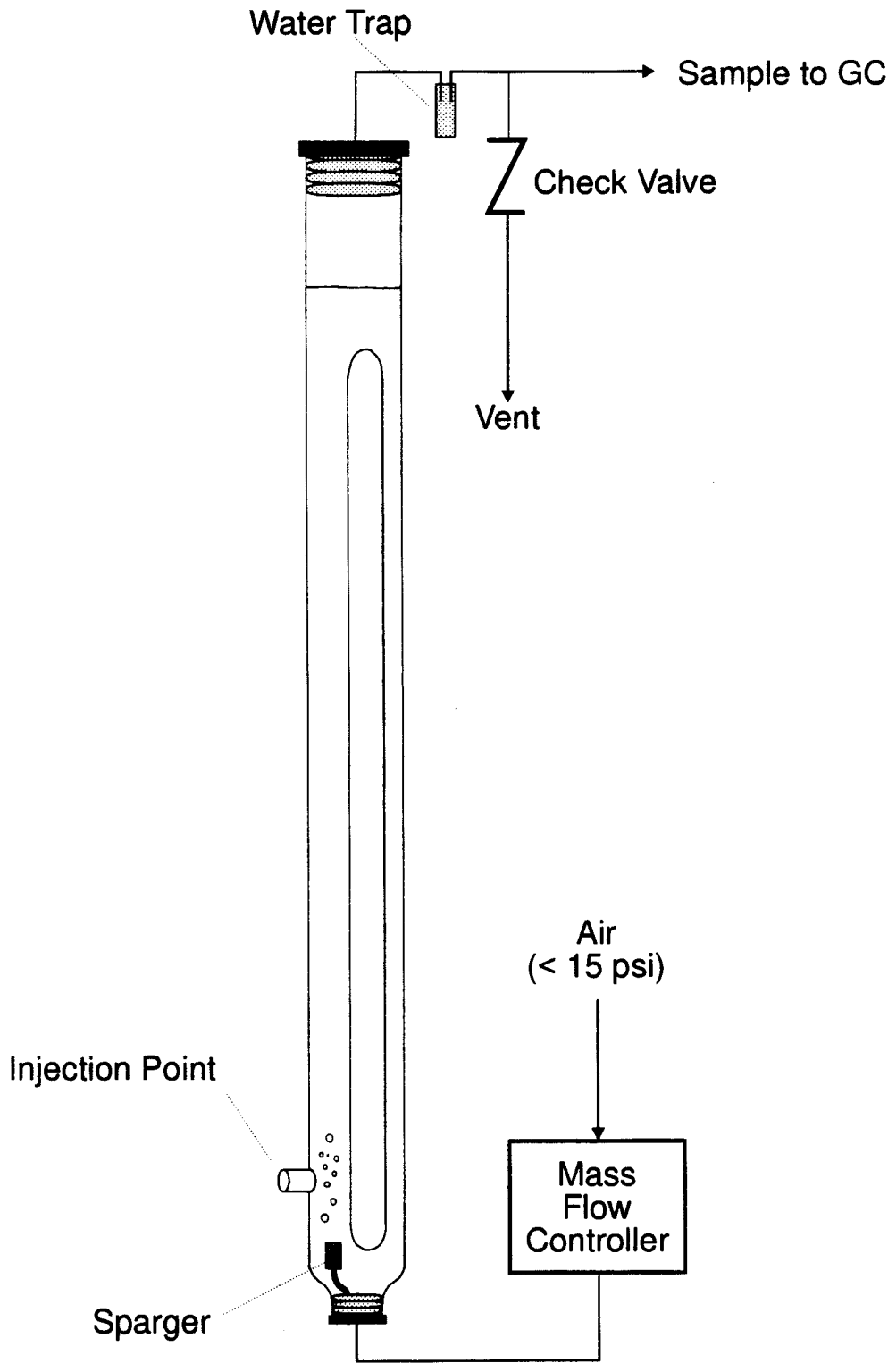

Figure 2. Example Aerated Draft Tube Reactor