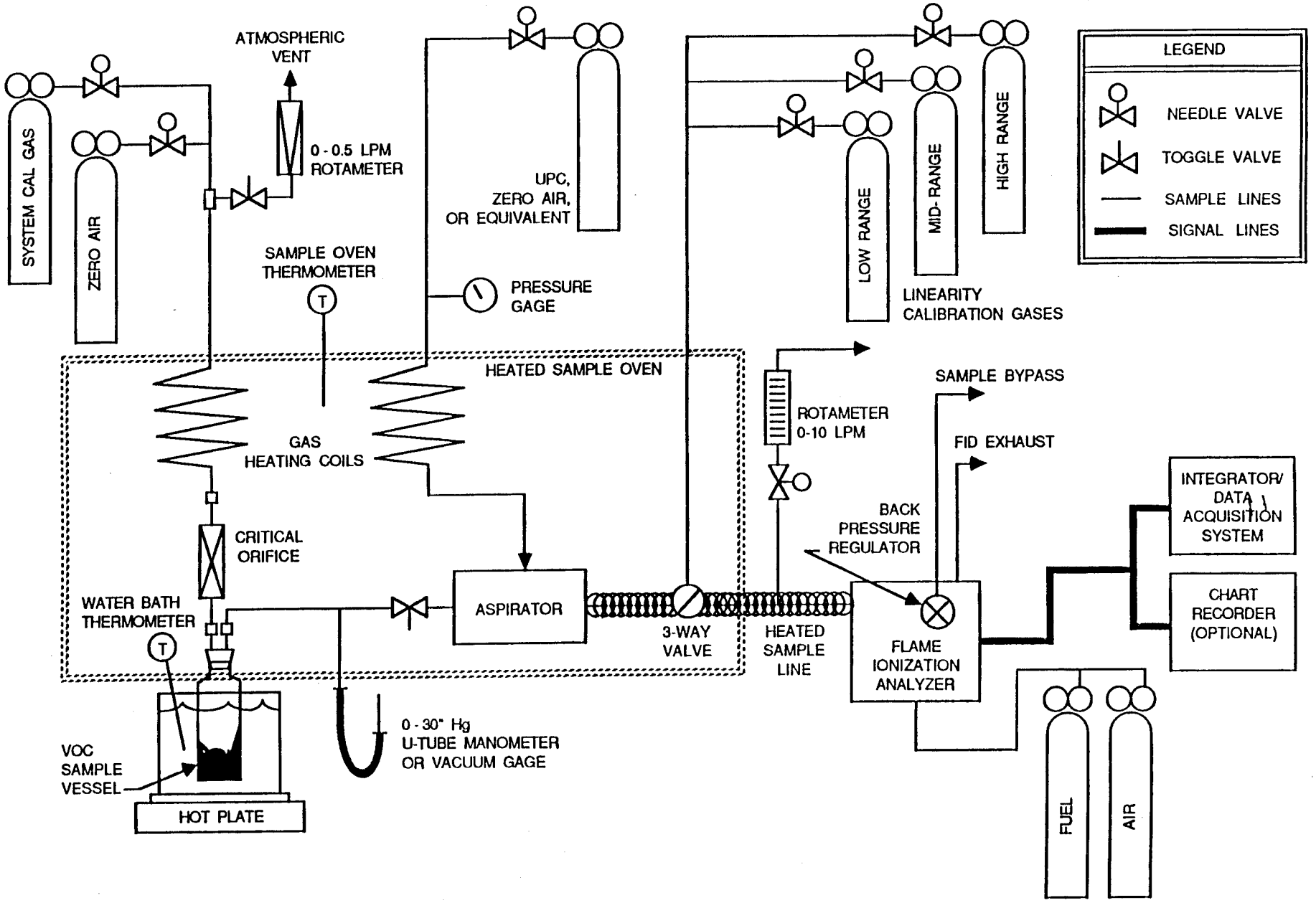

Figure 204A-1. Liquid analysis sample system.