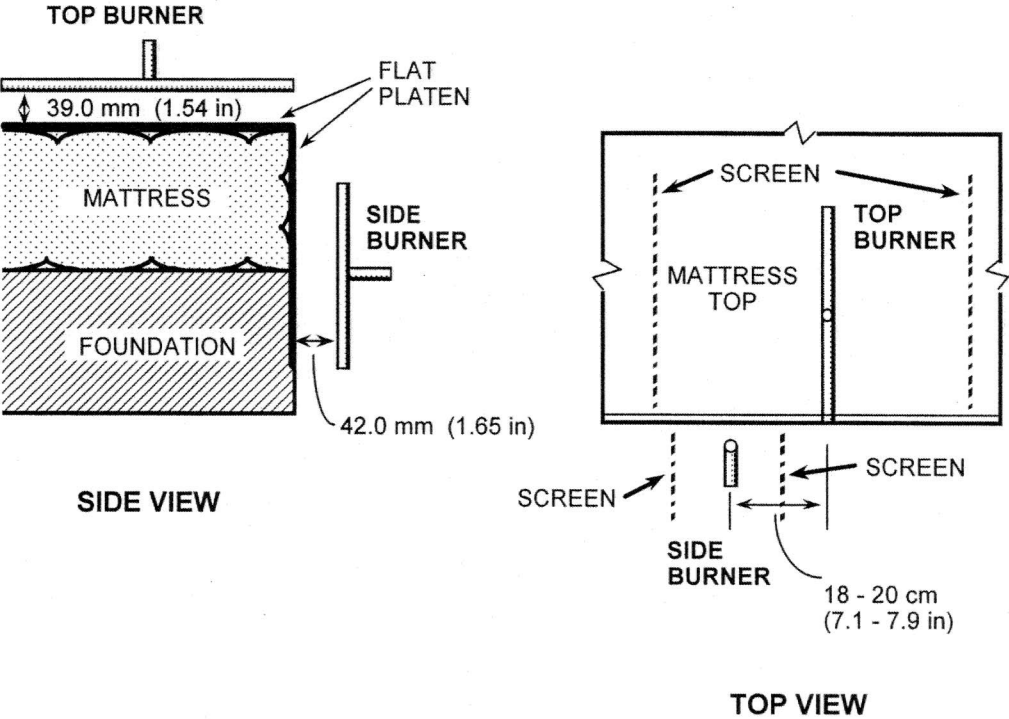

FIGURE 9. BURNER PLACEMENTS ON MATTRESS / FOUNDATION