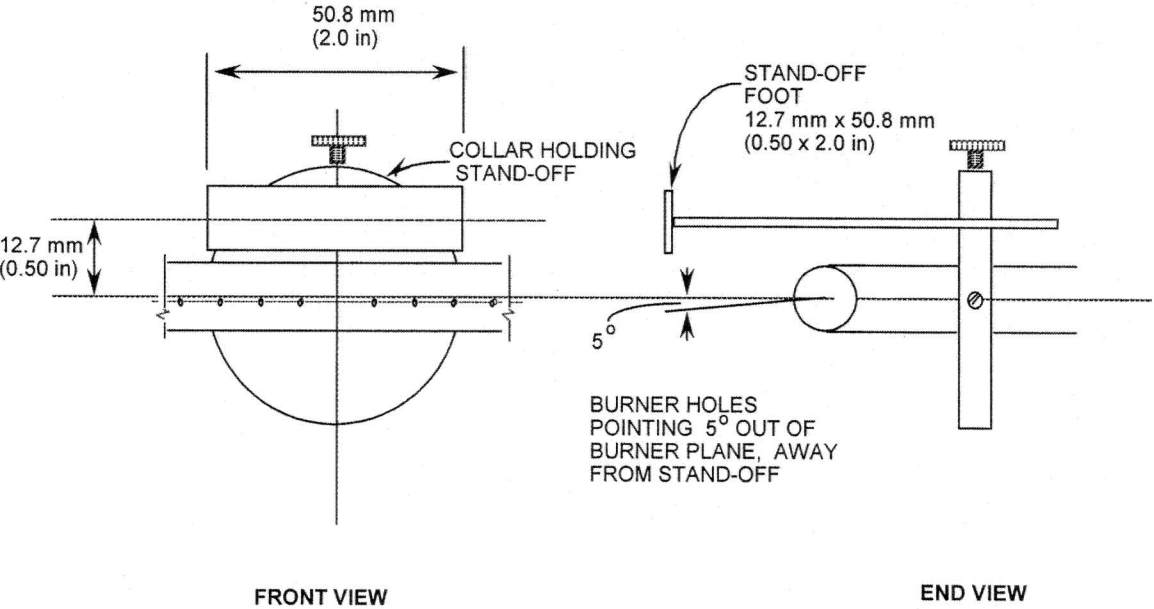


**FIGURE 5. DETAILS OF BURNER STAND-OFF**