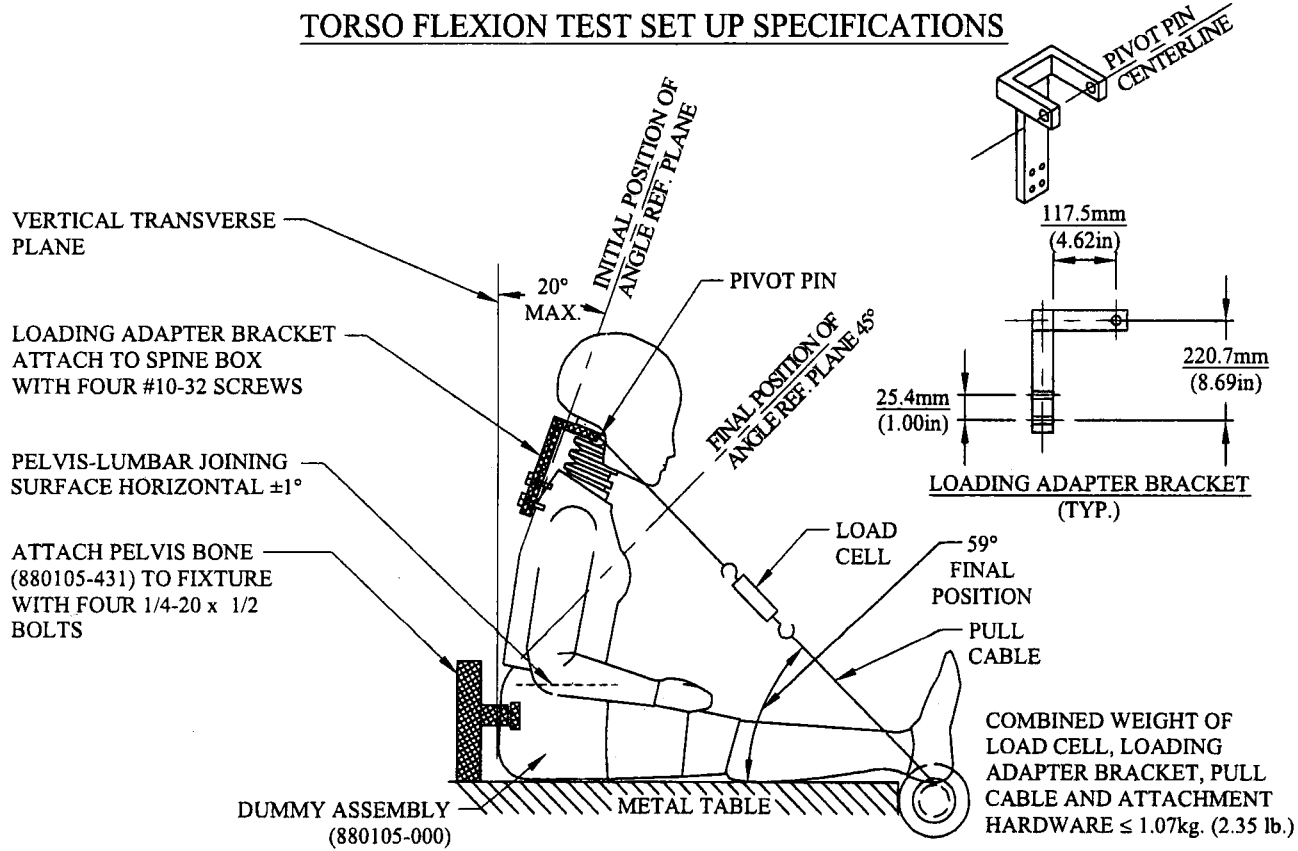FIGURE O4
TORSO FLEXION TEST SET UP SPECIFICATIONS