Figure 1 - Truck Tractor Illustration for § 393.11

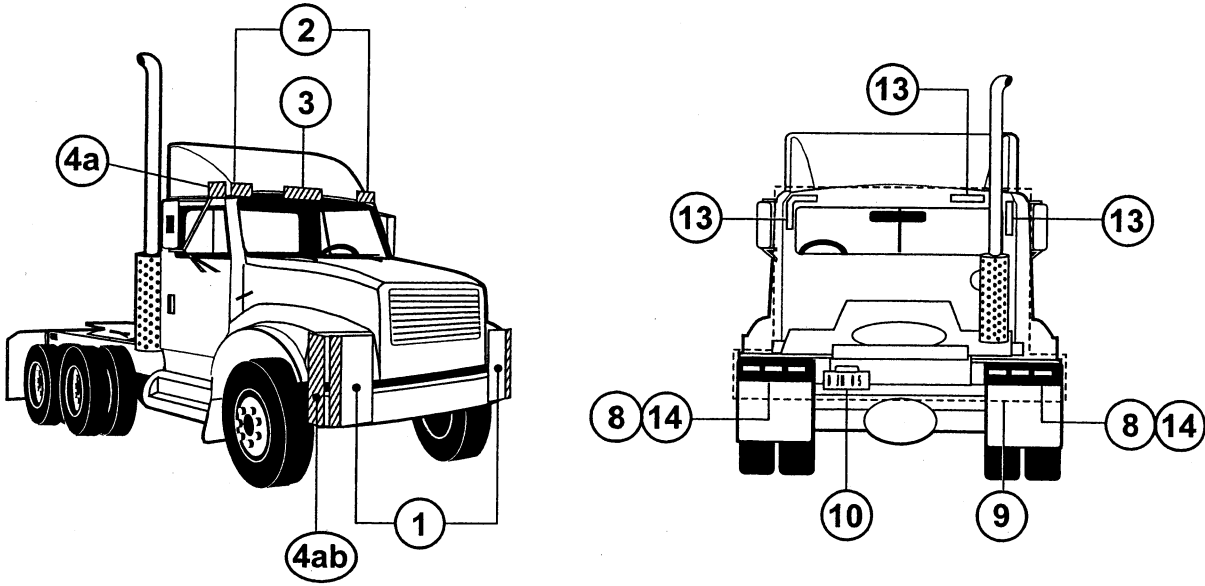
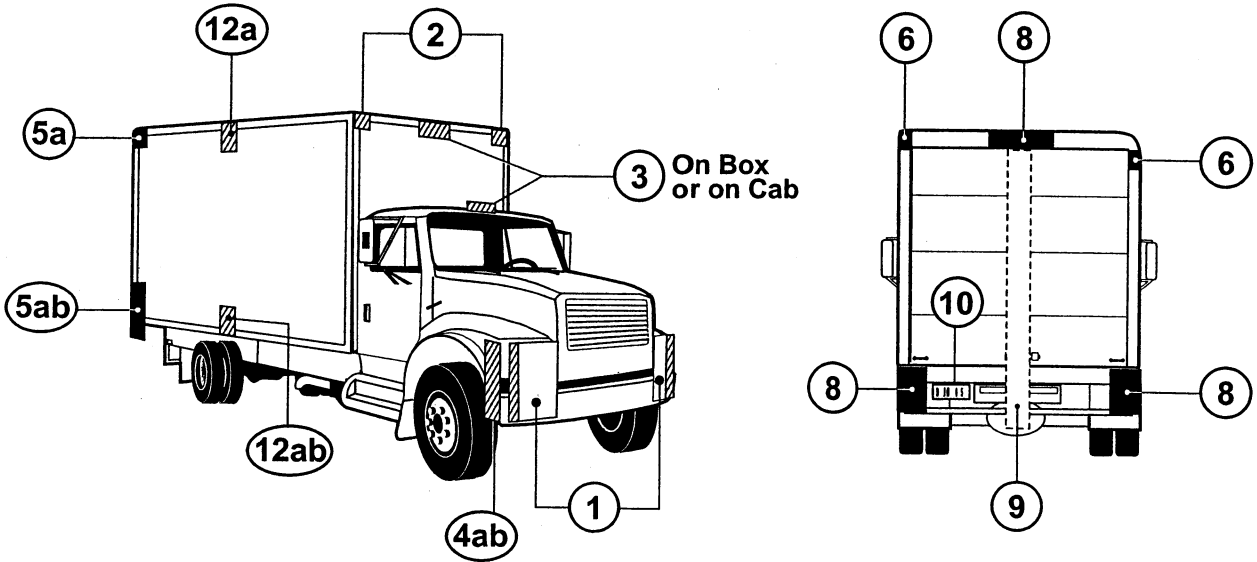
Figure 2 - Straight Truck Illustration for § 393.11