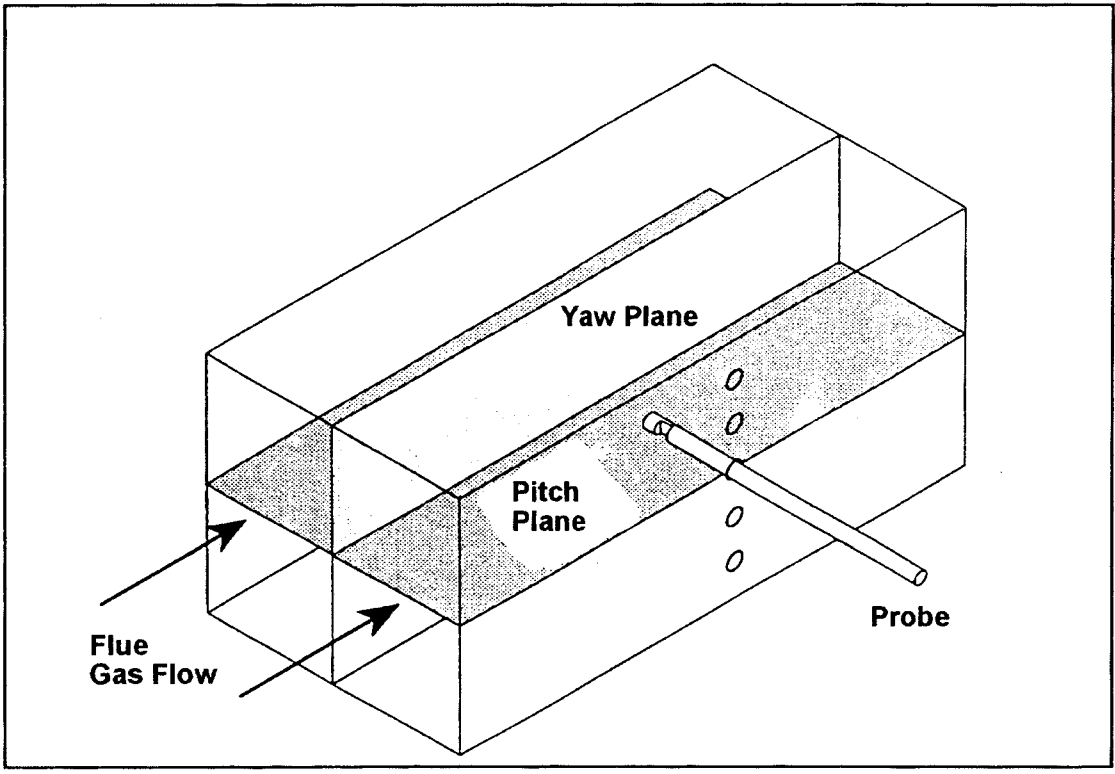

Figure 2F-1. Illustration of yaw and pitch planes in stack or duct.