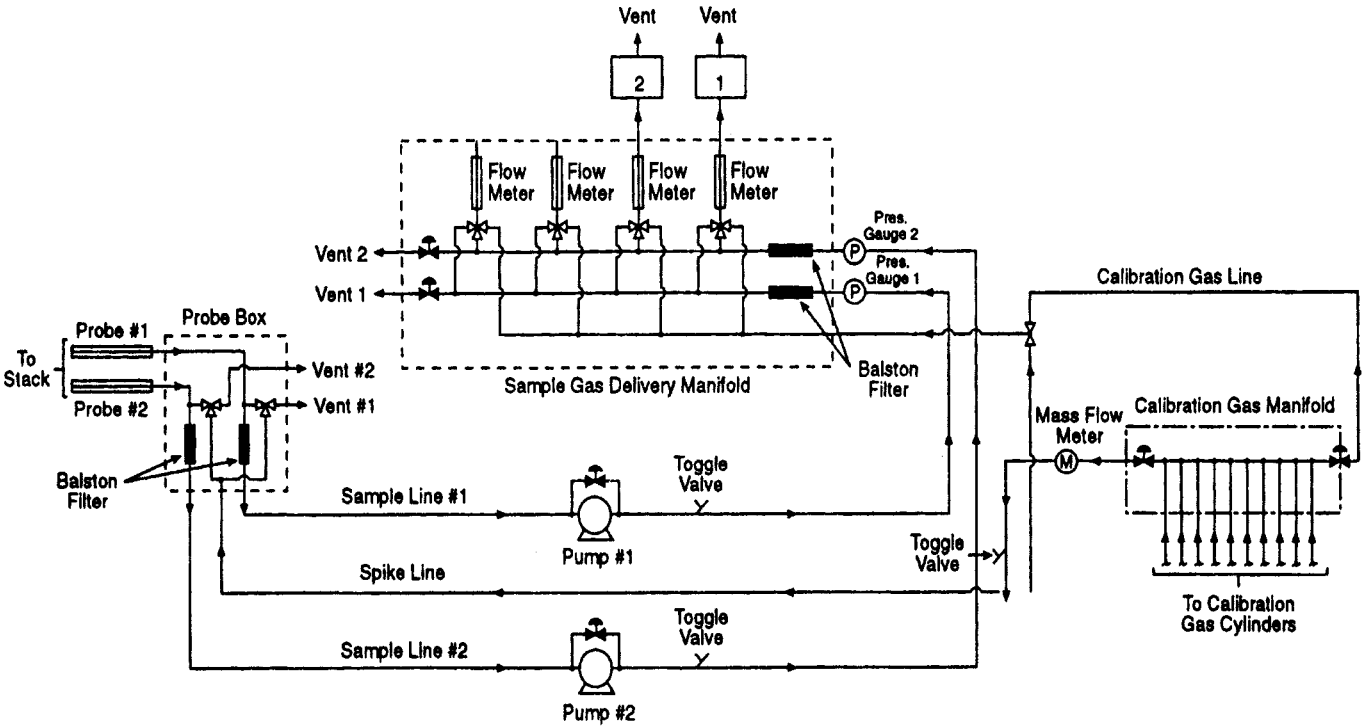

Figure 1. Extractive FTIR sampling system.