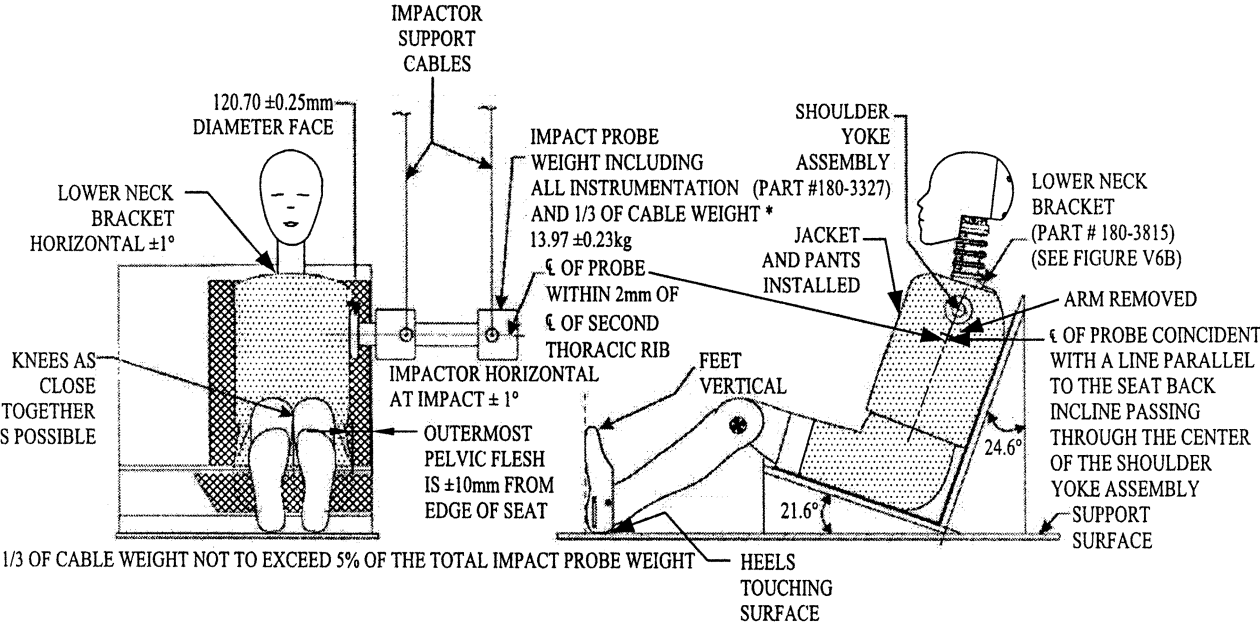FIGURE V6-A
THORAX WITHOUT ARM IMPACT