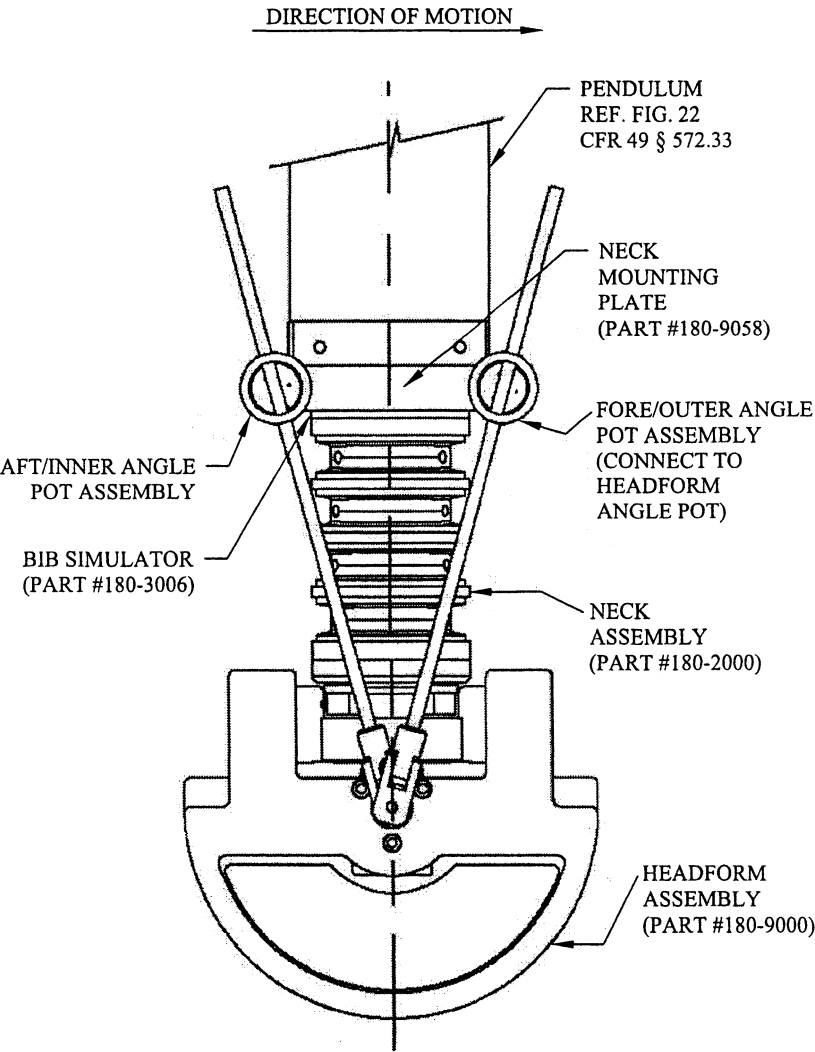FIGURE V2-B
NECK/HEADFORM ATTACHED TO PENDULUM FOR RIGHT-SIDE IMPACT