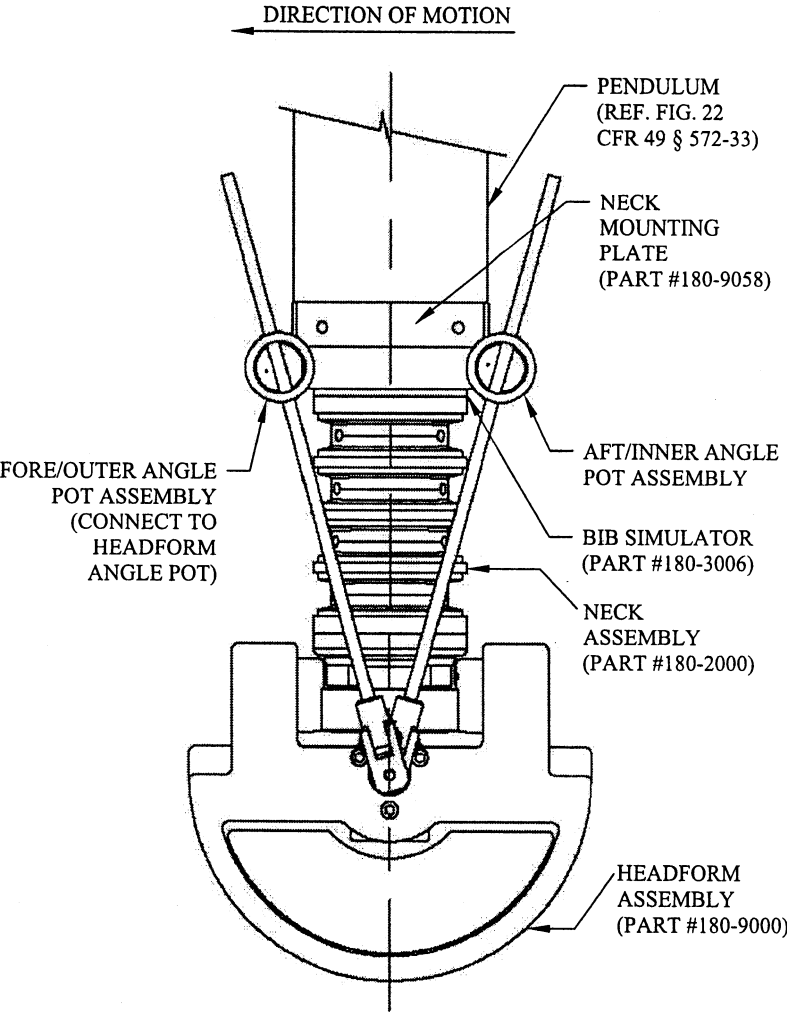FIGURE V2-A
NECK/HEADFORM ATTACHED TO PENDULUM FOR LEFT-SIDE IMPACT