Figure U1
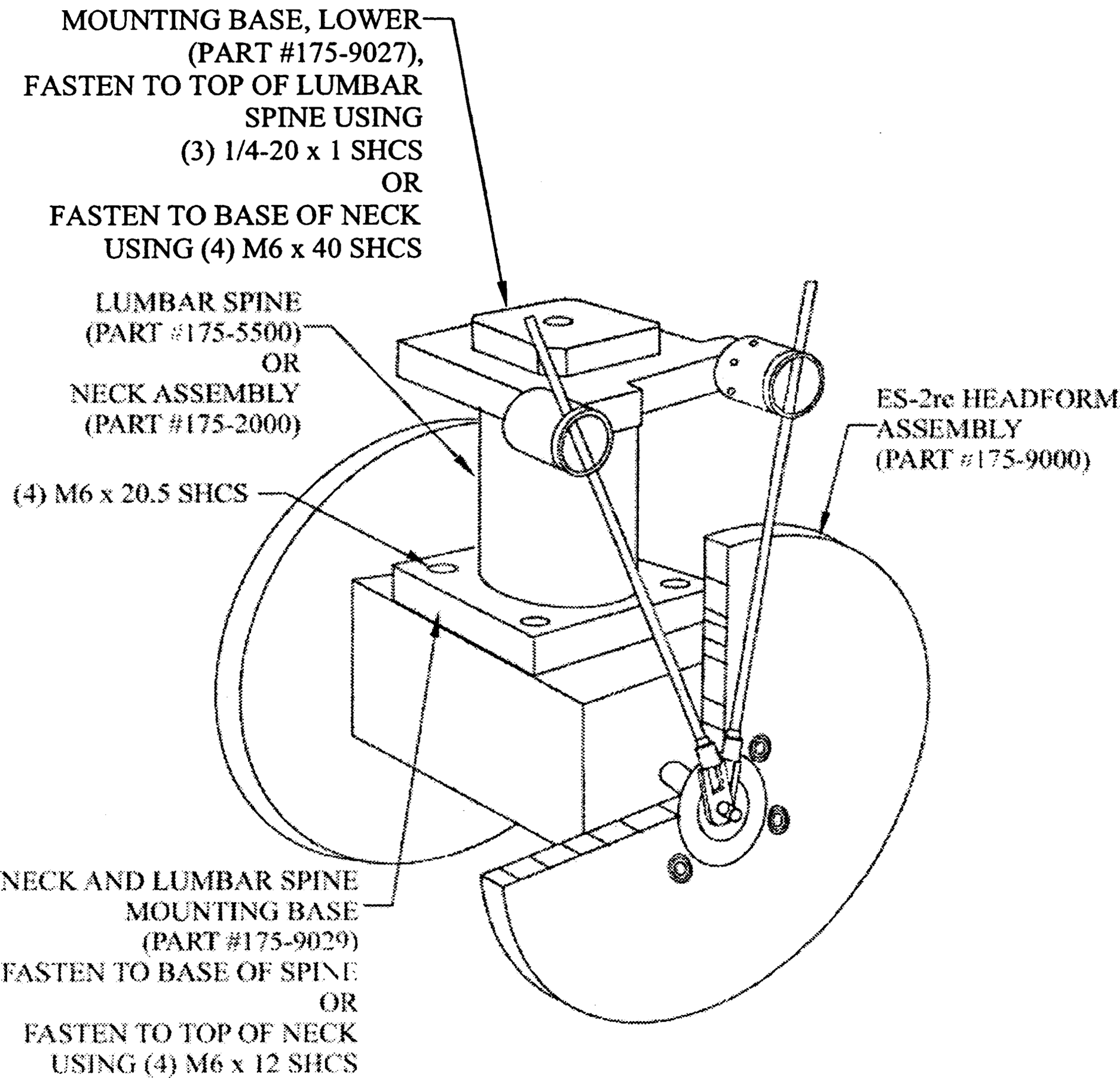
NECK/LUMBAR SPINE ATTACHED TO HEADFORM