Dimensions in millimeters

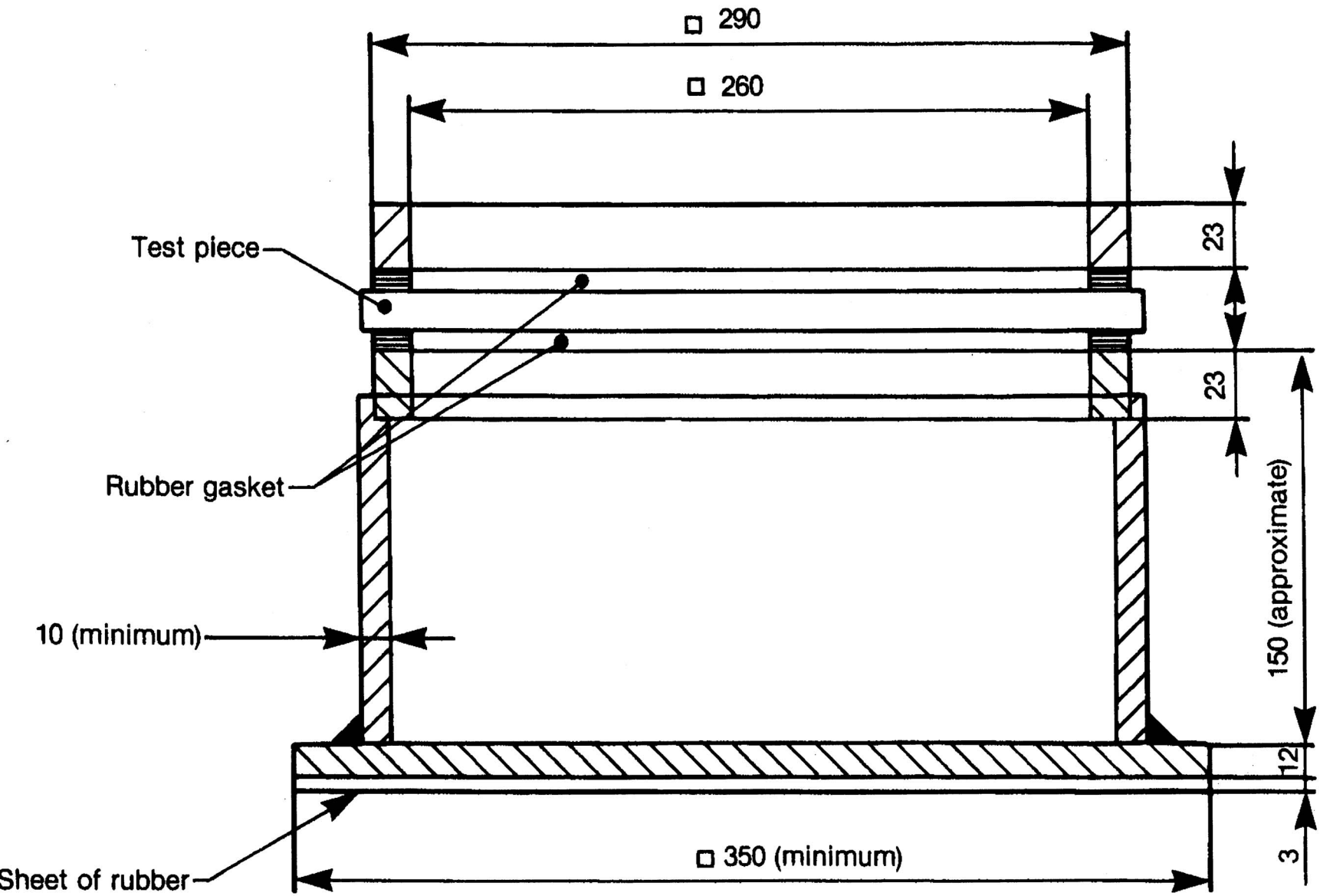


**Figure 1 — Test Fixture For Clamped Specimens**