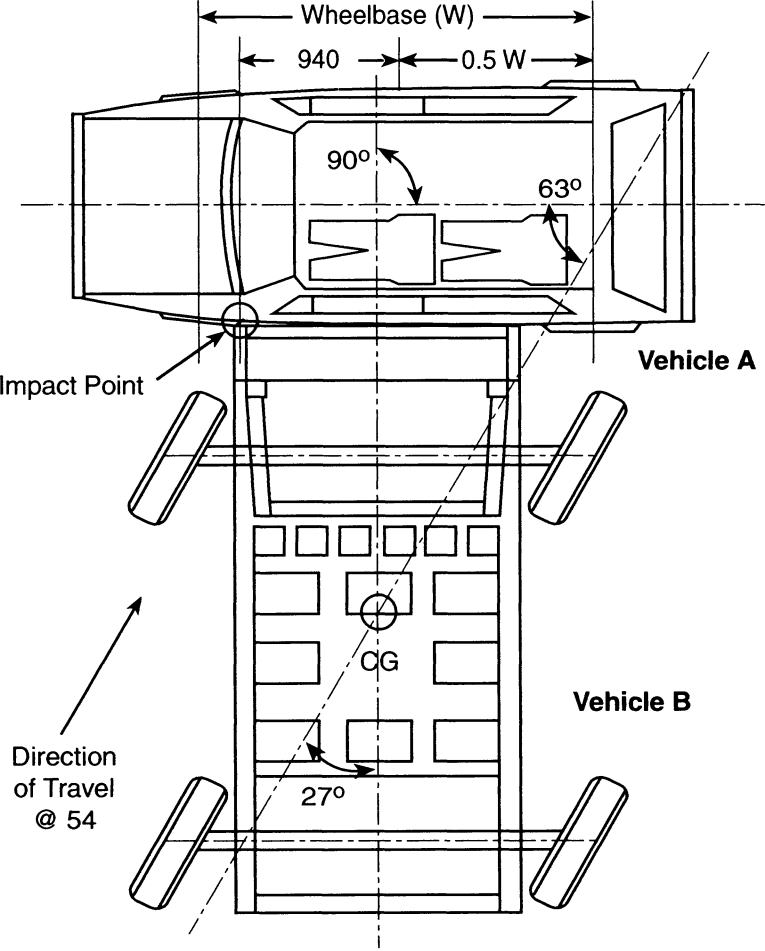

Figure 3—TEST CONFIGURATION
All dimensions in millimeters (mm)
velocity in km/h