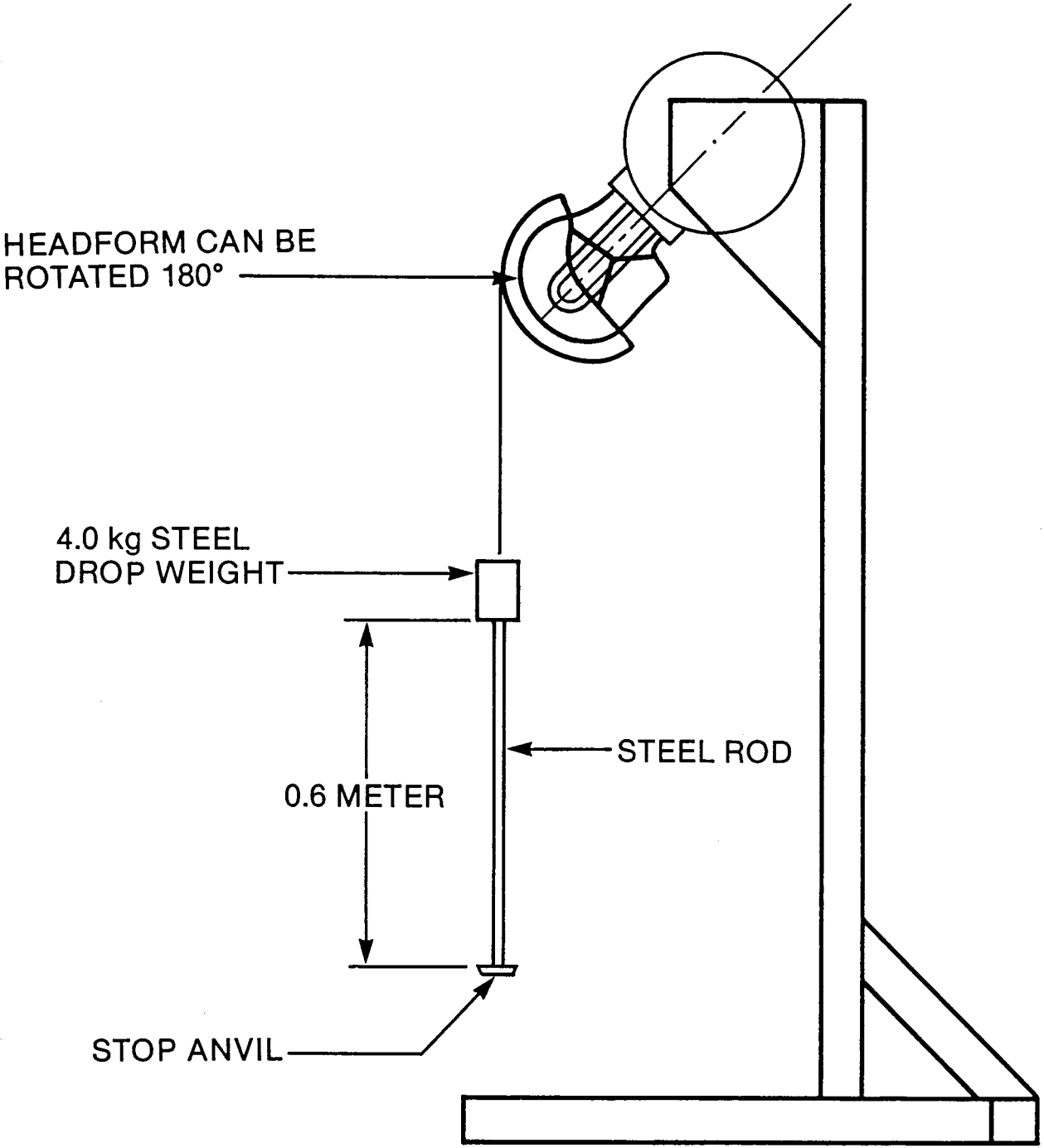

Figure 7. Typical Test Apparatus for Positional Stability Test