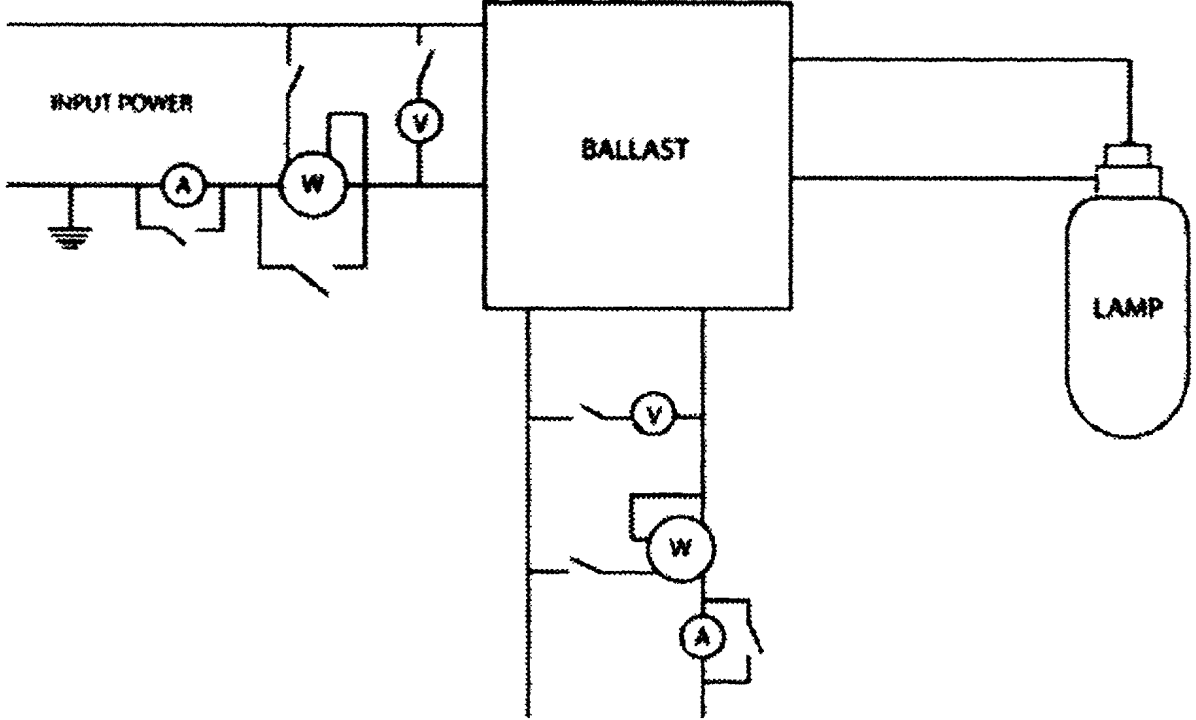

Figure 2. Circuit for Measuring AC Control Signal Power in Standby Mode