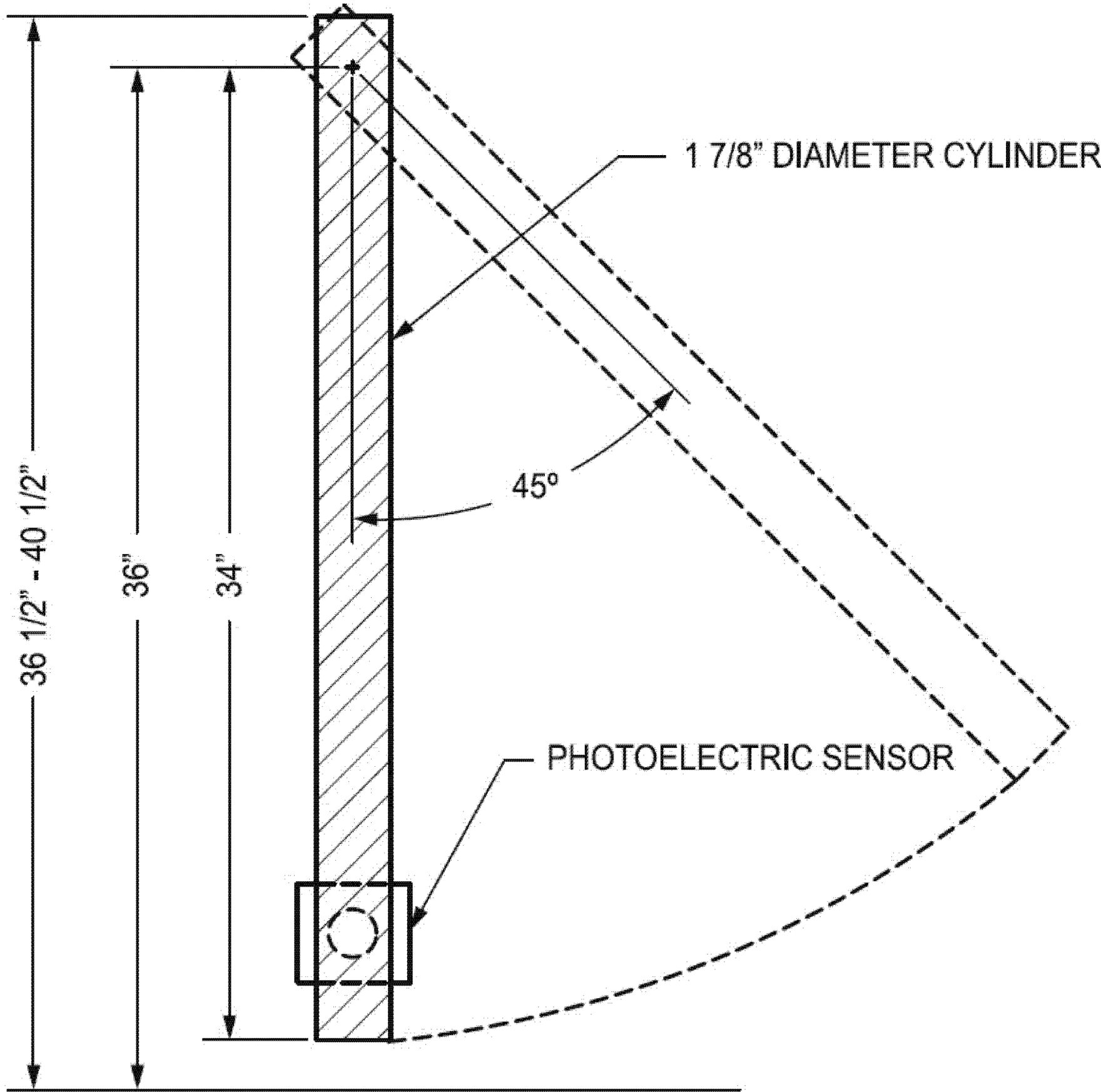# Figure 4 to Subpart A of Part 1211—Moving Obstruction