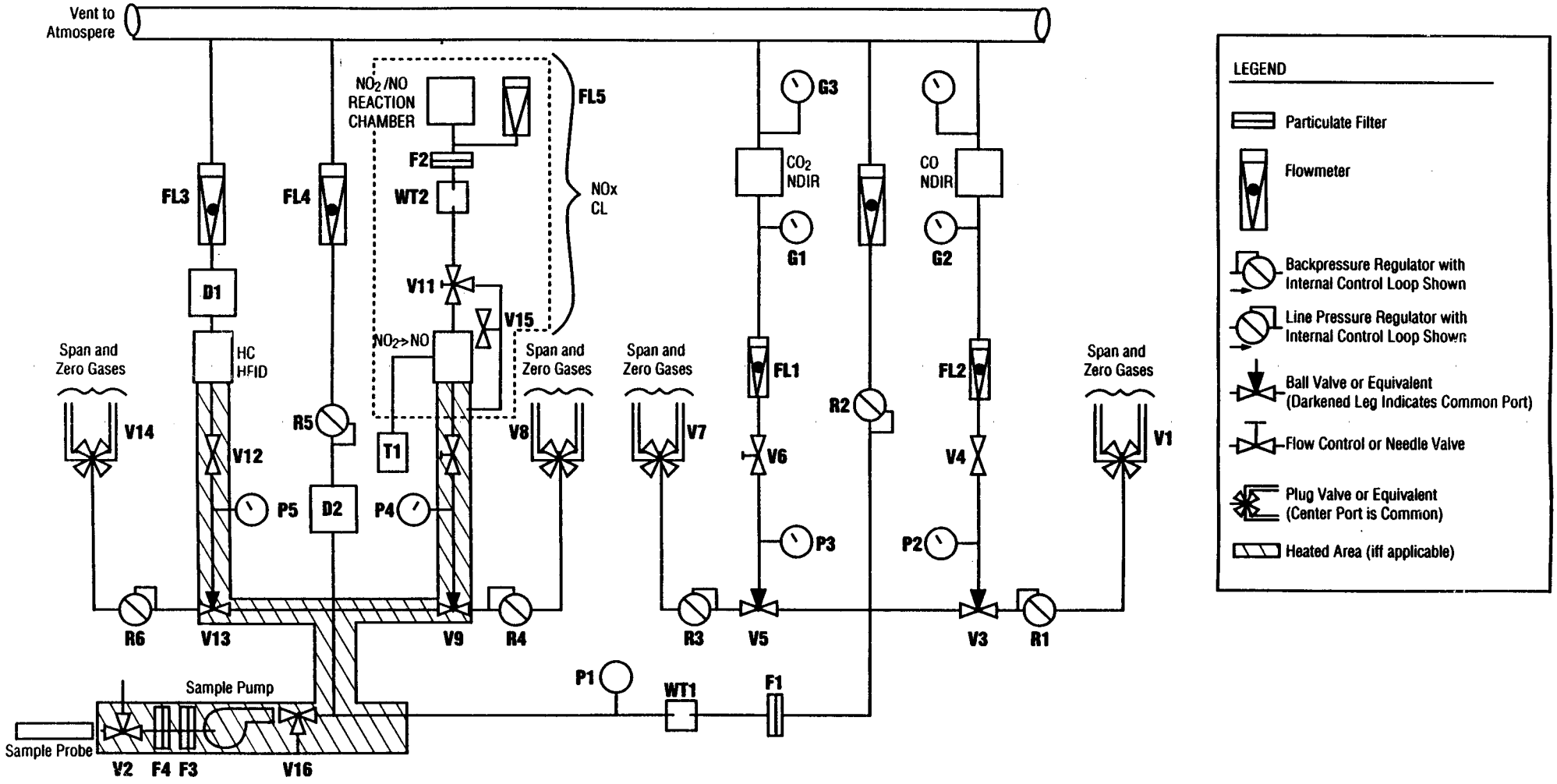

Figure 1. — Exhaust Gas Sampling and Analytical Train, Continuous Sampling