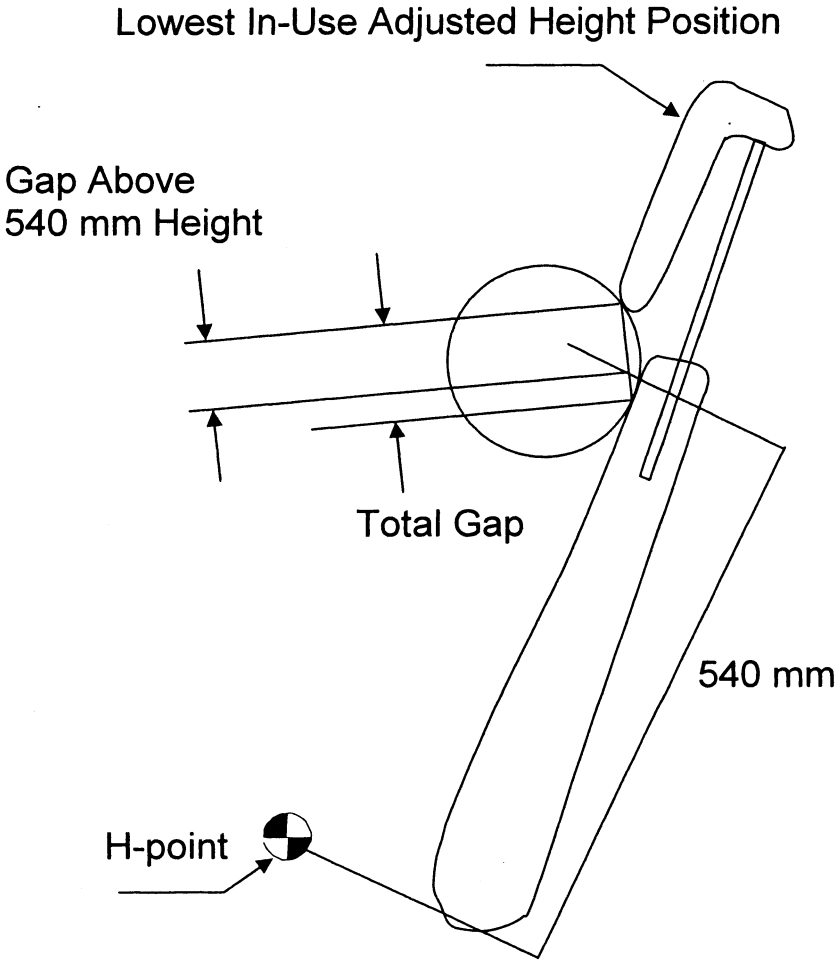Figure 4 of §571.202a – Portion of gap above 540 mm height.