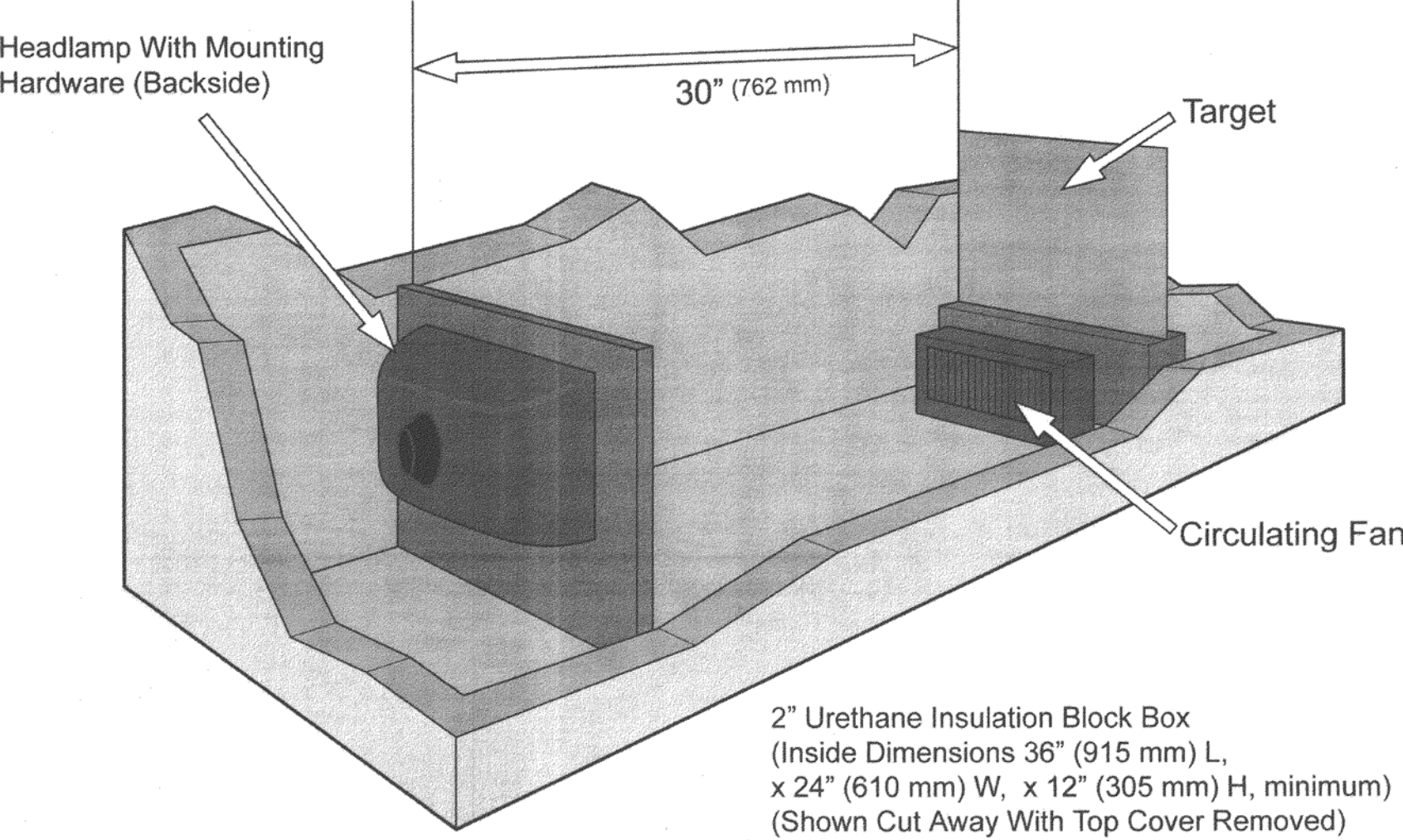

DIRT / AMBIENT TEST SETUP

FIGURE 7